| REG | STATE | PROJECT | SHEET NO. |
|---|---|---|---|
| | | | |

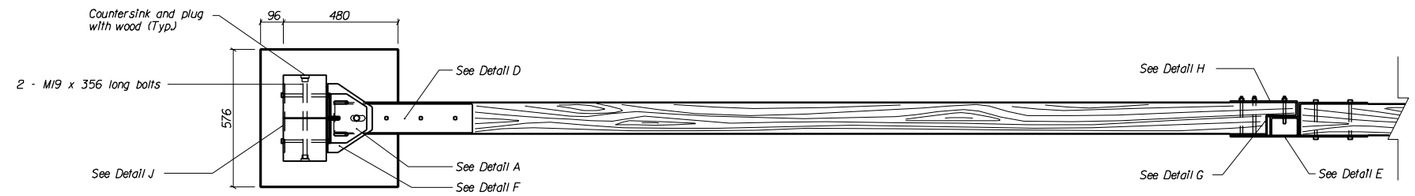


PLAN

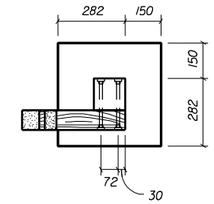


REST POST PLAN

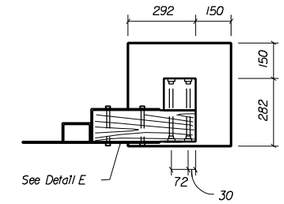


LOCK POST PLAN

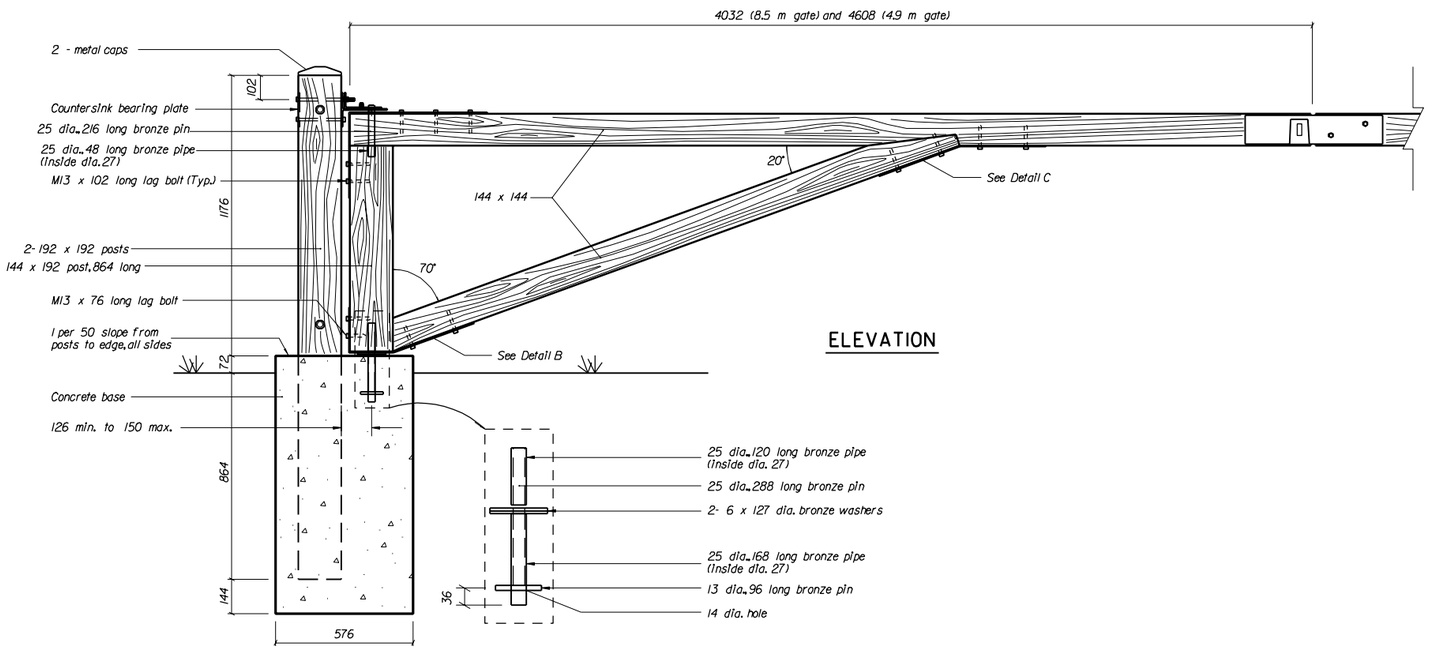


ELEVATION

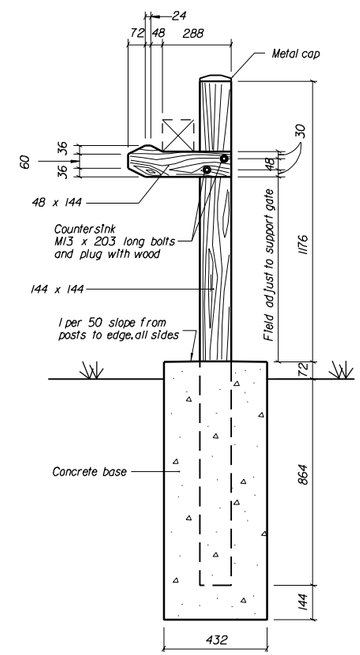


REST POST ELEVATION

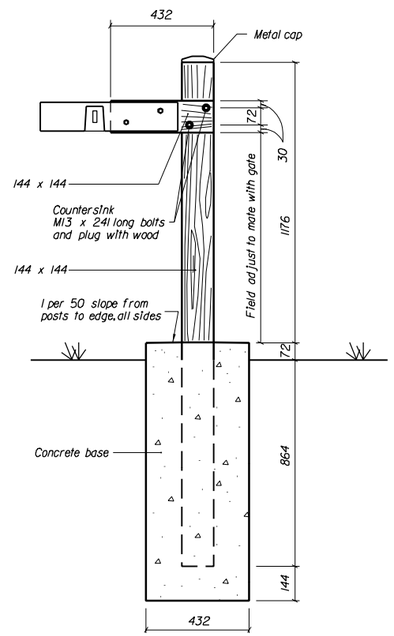


LOCK POST ELEVATION

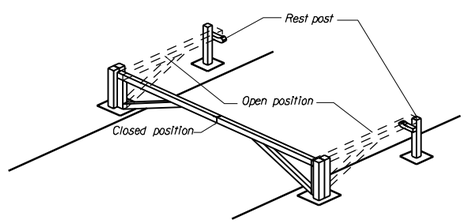


ISOMETRIC VIEW OF 28-FOOT GATE

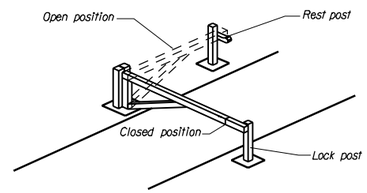


ISOMETRIC VIEW OF 16-FOOT GATE

**NOTES:**

1. Unless otherwise shown,dimensions are in millimeters.
2. All bolts M13 unless otherwise noted.
3. Use 25 mm dia.washers under all bolt heads and nuts unless otherwise noted.
4. All hardware,except parts made of bronze,are galvanized (double hot dipped) after fabrication.
5. Timbers are select douglas fir or southern yellow pine (S4S). Pressure treat posts embeded in concrete to 0.60 to 0.80 CCA. All other timbers are 0.40 CCA pressure treated. Apply three brush coats of CCA to all saw cut areas and drilled holes.
6. Contractor will make all necessary field adustments (with approval from the CO) to produce a plumb gate.
7. Concrete to conform to section 601.

U.S. DEPARTMENT OF TRANSPORTATION
FEDERAL HIGHWAY ADMINISTRATION
EASTERN FEDERAL LANDS HIGHWAY DIVISION

METRIC DETAIL

# 4.9 m AND 8.5 m GATES

SHEET 1 OF 2

DETAIL APPROVED FOR USE --/----

REVISED: 09/93 07/98

DETAIL EM619-04

08/29/2003 02:49:31 PM M:\Standard\barb_new\EM619\904.dgn

em619\904.dgn

| REG | STATE | PROJECT | SHEET NO. |
|---|---|---|---|
| | | | |

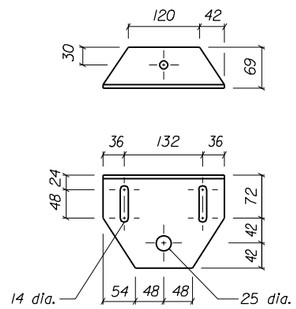


DETAIL A

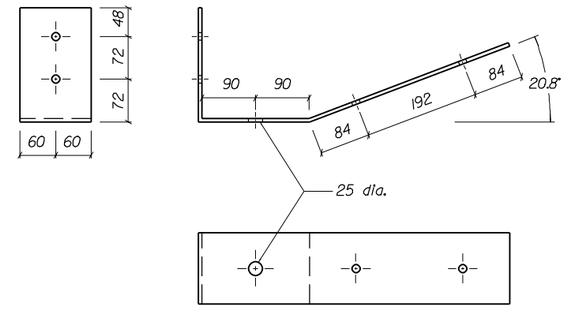


DETAIL B

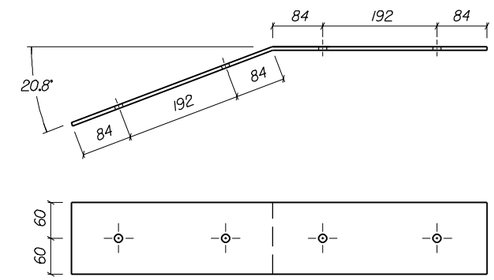


DETAIL C

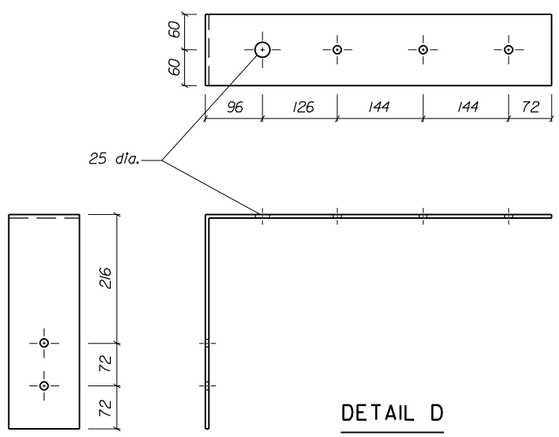


DETAIL D

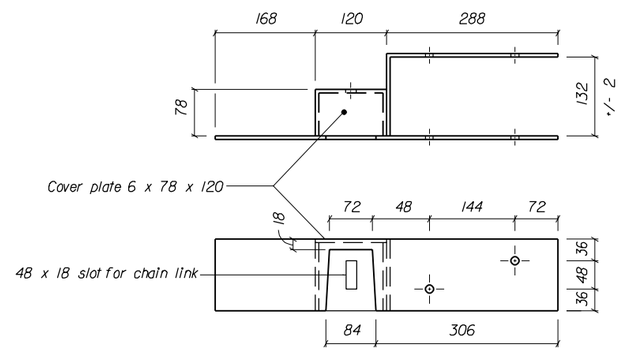


DETAIL E

(8.5 m GATE)

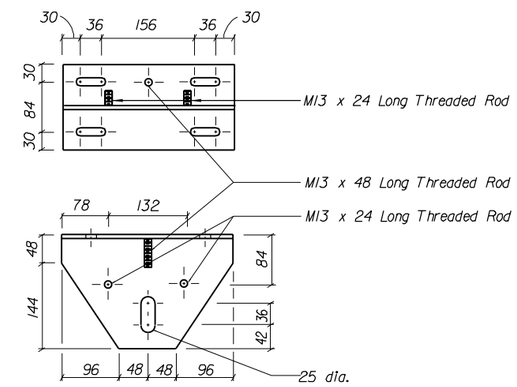


DETAIL F

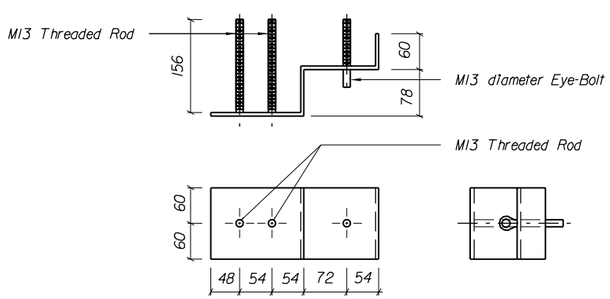


DETAIL G

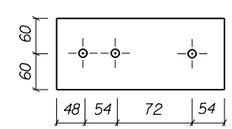


DETAIL H

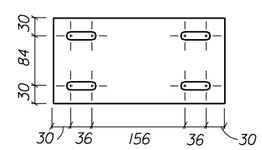


DETAIL J

*NOTES:*

1. *Unless otherwise shown, dimensions are in millimeters.*
2. *All steel plates to be 1/4" thick.*
3. *All holes 9/16" dia. unless shown.*
4. *All bolts 1/2" dia. unless shown.*
5. *All steel plates and hardware to be galvanized (double hot dipped after fabrication).*
6. *Contractor will verify all dimensions.*

U.S. DEPARTMENT OF TRANSPORTATION
FEDERAL HIGHWAY ADMINISTRATION
EASTERN FEDERAL LANDS HIGHWAY DIVISION

METRIC DETAIL

# 4.9 m AND 8.5 m GATES

SHEET 2 OF 2

DETAIL APPROVED FOR USE --/----

REVISED: 09/93 07/98 01/01

DETAIL EM619-04

08/29/2003 02:49:41 PM M:\Standard\barb_new\EM619\04.dgn

em619\04.dgn