REG	STATE	PROJECT	SHEET NO.

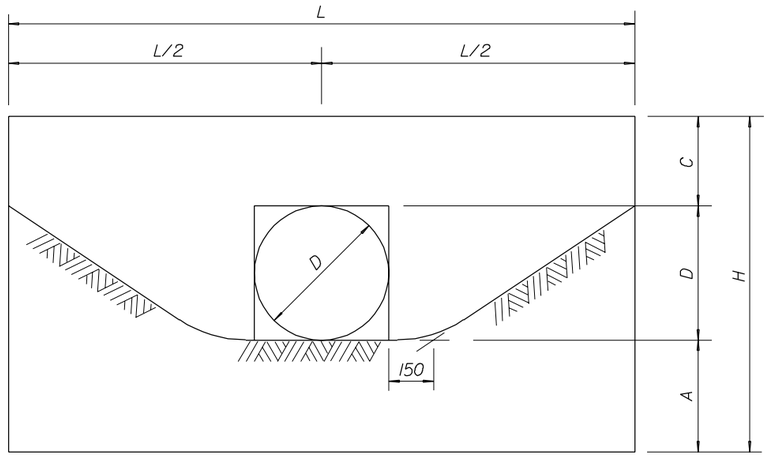

SINGLE

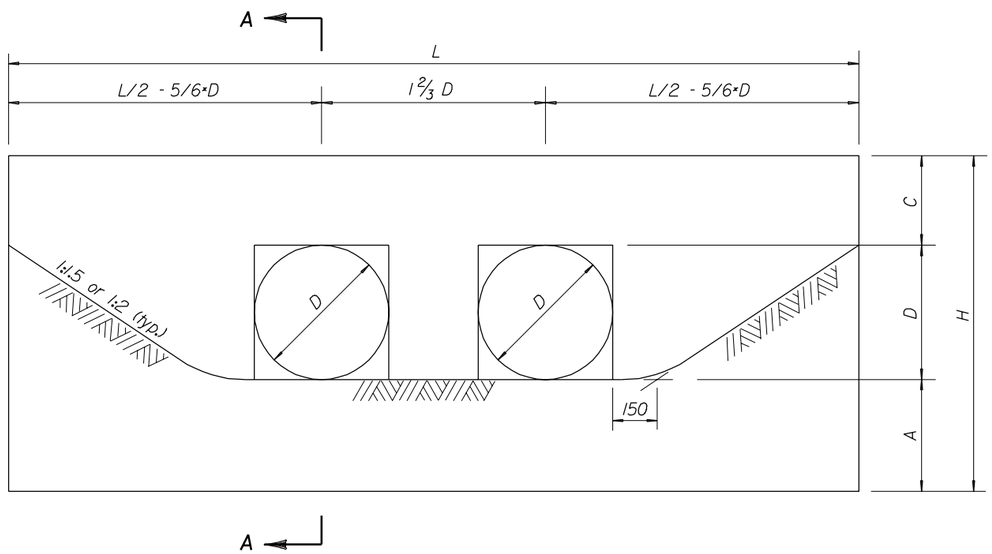

DOUBLE

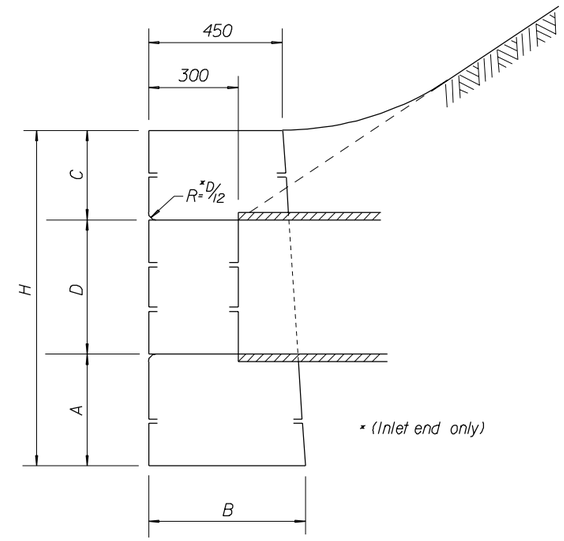

SECTION A-A

NOTES:

1. Unless otherwise shown, dimensions are in millimeters.
2. All headwalls are oriented parallel to the roadway centerline unless otherwise indicated on the plans or by the CO.
3. When pipes are on skew, adapt and lengthen headwalls as directed.
4. Quantities are for one headwall with pipe at right angles.
5. Construct headwalls using dimensions shown under values for 1:1.5 slope, unless otherwise designated by the CO.

DIMENSION AND QUANTITIES TABLE

	VALUES FOR 1:1.5 SLOPE								VALUES FOR 1:2 SLOPE							
	SINGLE				DOUBLE				SINGLE				DOUBLE			
D (min.)	450	600	750	900	450	600	750	900	450	600	750	900	450	600	750	900
L or L[1]	2100	3000	3900	4800	2850	4000	5150	6300	2550	3700	4850	6000	3300	4700	6100	7500
H	1125	1450	1775	2100	1125	1450	1775	2100	1125	1450	1775	2100	1125	1450	1775	2100
B	525	600	725	850	525	600	725	850	525	600	725	850	525	600	725	850
A (min.)	375	450	525	600	375	450	525	600	375	450	525	600	375	450	525	600
C	300	400	500	600	300	400	500	600	300	400	500	600	300	400	500	600
m^3	1.06	2.12	3.79	6.12	1.38	2.71	4.81	7.73	1.31	2.65	4.78	7.75	1.63	3.24	5.80	9.37

NO SCALE

U.S. DEPARTMENT OF TRANSPORTATION
FEDERAL HIGHWAY ADMINISTRATION
EASTERN FEDERAL LANDS HIGHWAY DIVISION

METRIC DETAIL

STONE MASONRY HEADWALLS
FOR SMALL PIPE CULVERTS

DETAIL APPROVED FOR USE --/----

REVISED: 4/00

DETAIL
EM620-01

02/27/2003 08:15:20 AM M:\Standard\METRIC\EM62001.dgn

em62001.dgn