REG	STATE	PROJECT	SHEET NO.

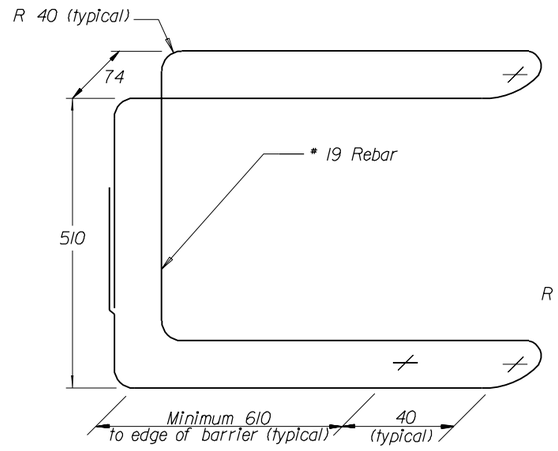

LOOP END A

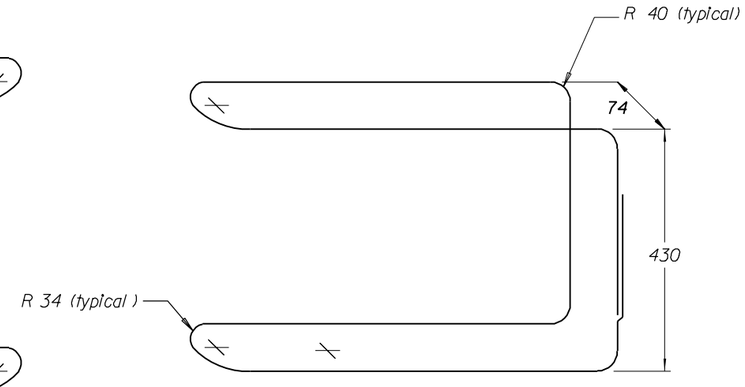

LOOP END B

Notes:
1. All rebar dimensions are out-to-out unless otherwise noted.
2. Manufacture connectors from AASHTO M31M (ASTM A615M) plain grade 400 reinforcing steel.

REBAR LOOP CONNECTOR

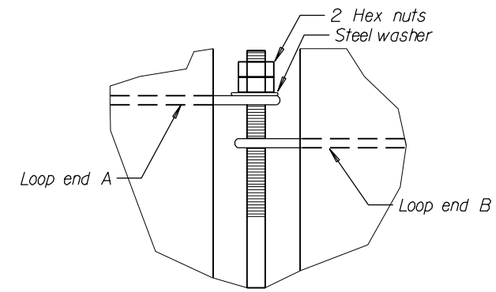

CONNECTION ELEVATION
DETAIL A

NOTES:

All dimensions are millimeters unless otherwise noted.

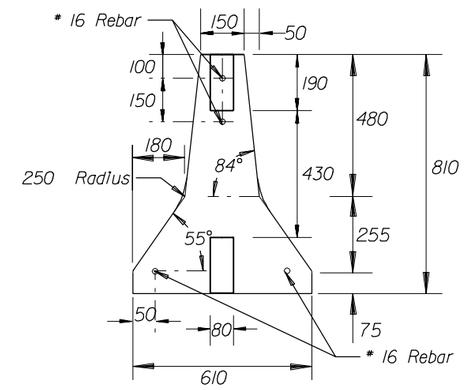

Notes:
1. A corner radius of 25 is permissible on all edges unless otherwise noted. See BOTTOM CHAMFER and TOP CHAMFER details.
2. Embed a suitable connector into the concrete at each end.

END ELEVATION

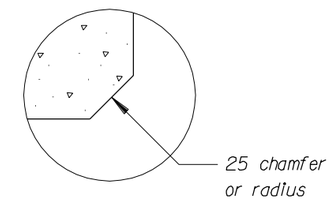

BOTTOM CHAMFER

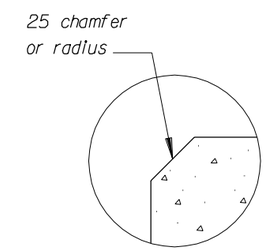

TOP CHAMFER

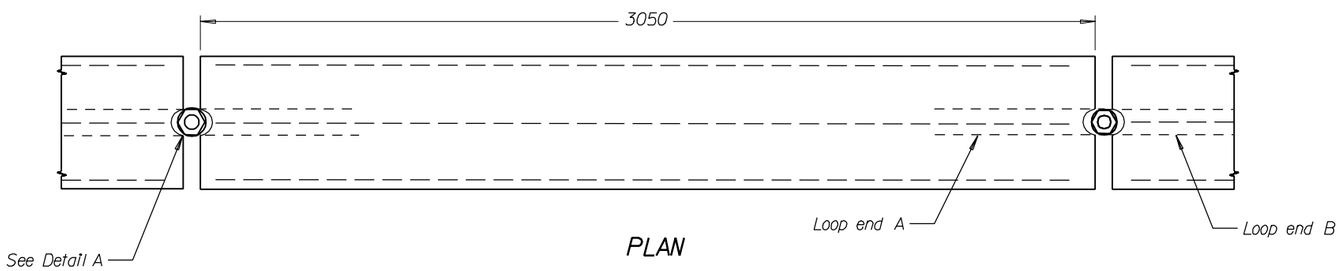

PLAN

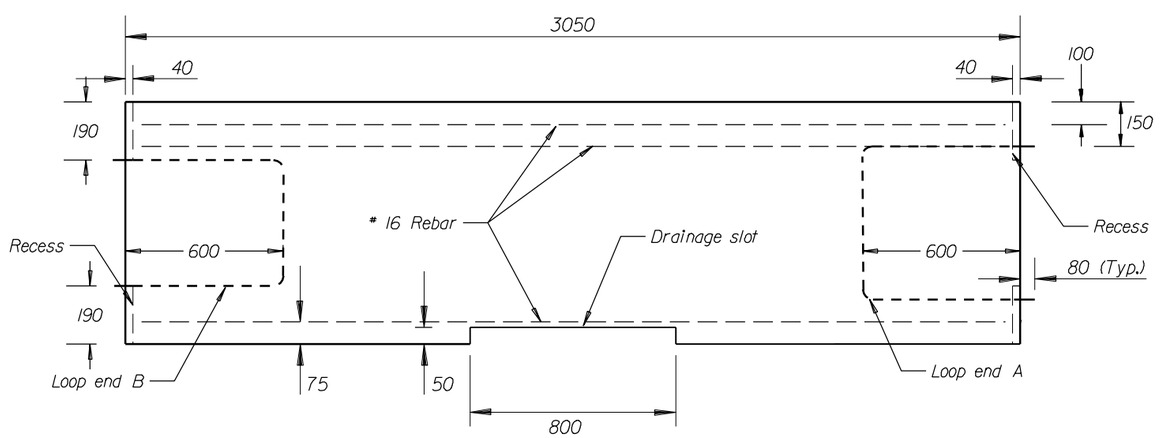

ELEVATION

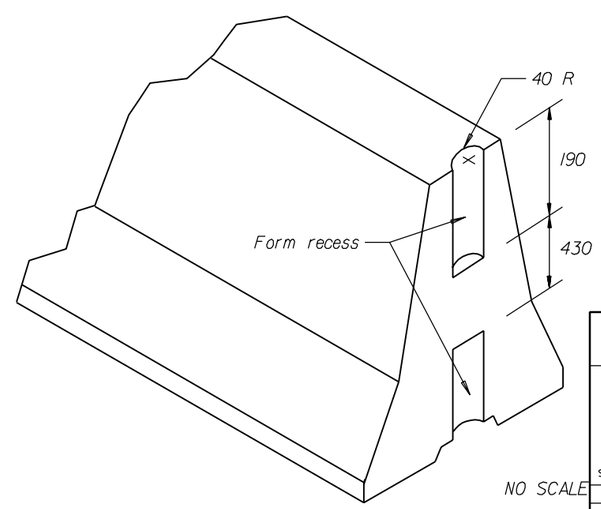

NO SCALE

U.S. DEPARTMENT OF TRANSPORTATION
FEDERAL HIGHWAY ADMINISTRATION
EASTERN FEDERAL LANDS HIGHWAY DIVISION

METRIC DETAIL

CONSTRUCTION TRAFFIC CONTROL
TEMPORARY CONCRETE BARRIER

SHEET 1 OF 2

DETAIL APPROVED FOR USE --/----

REVISED: 07/98

DETAIL
EM635-04

08/28/2003 02:43:45p 3:\PW\mh\26\60\60\26\359\EM63504.dgn

em63504.dgn

REG	STATE	PROJECT	SHEET NO.

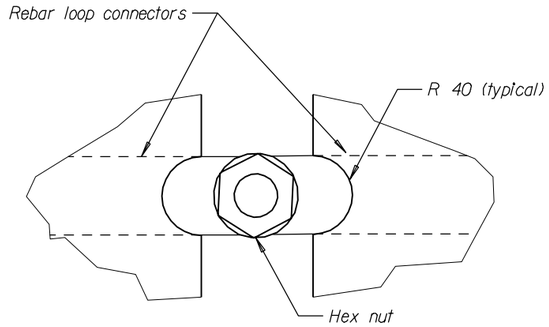

PLAN OF CONNECTION

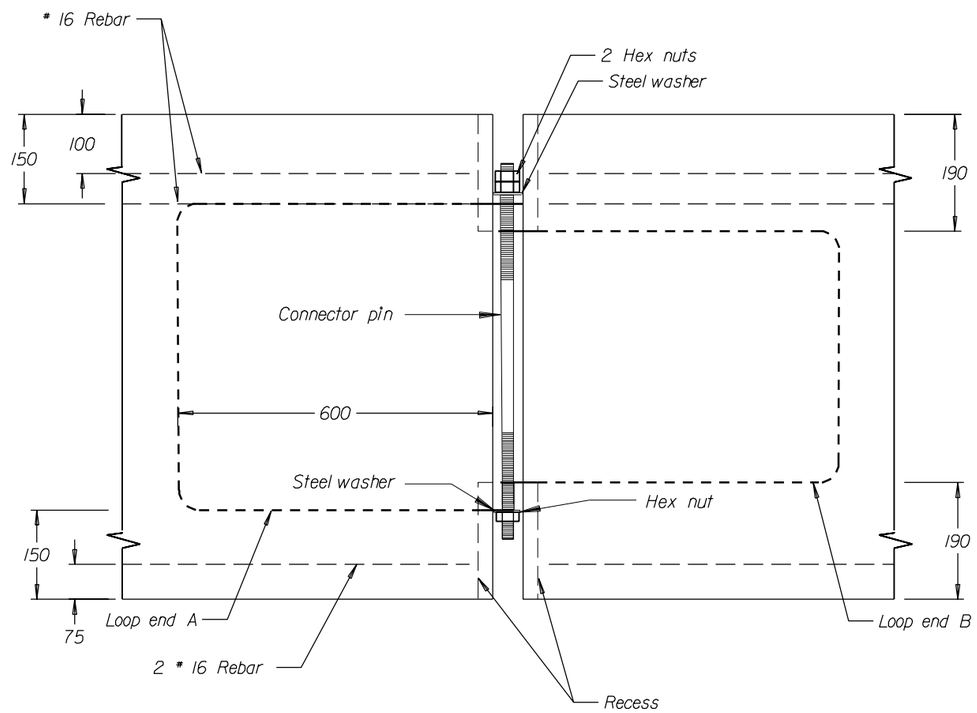

ELEVATION OF CONNECTION

NOTES:

All dimensions are millimeters unless otherwise noted.

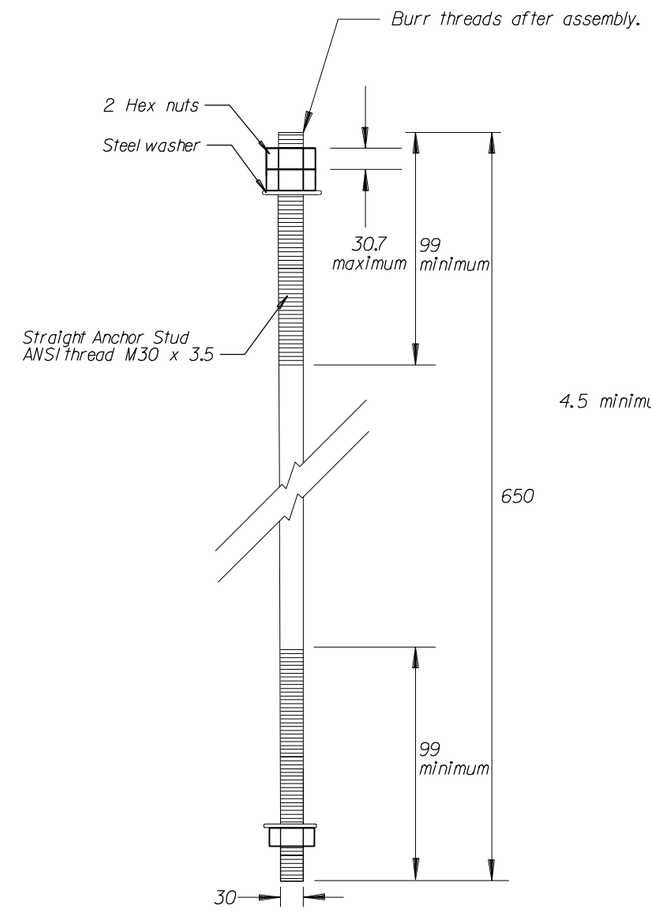

STRAIGHT ANCHOR STUD & NUTS

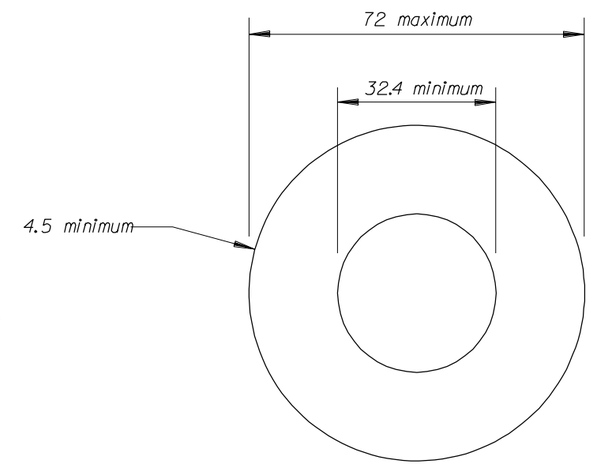

PLAIN GALVANIZED STEEL WASHER FOR PIN ANSI SIZE 30

NO SCALE

U.S. DEPARTMENT OF TRANSPORTATION
FEDERAL HIGHWAY ADMINISTRATION
EASTERN FEDERAL LANDS HIGHWAY DIVISION

METRIC DETAIL

CONSTRUCTION TRAFFIC CONTROL
TEMPORARY CONCRETE BARRIER

SHEET 2 OF 2

DETAIL APPROVED FOR USE --/----

REVISED: 07/98

DETAIL
EM635-04

em63504.dgn