REG	STATE	PROJECT	SHEET NO.

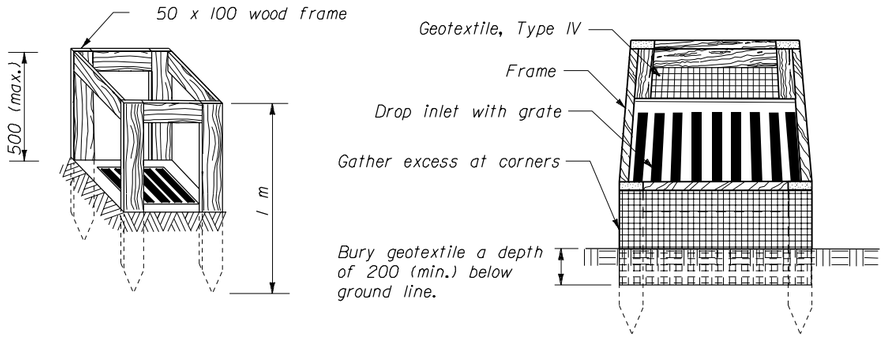

SILT FENCE DROP INLET PROTECTION (TYPE A)

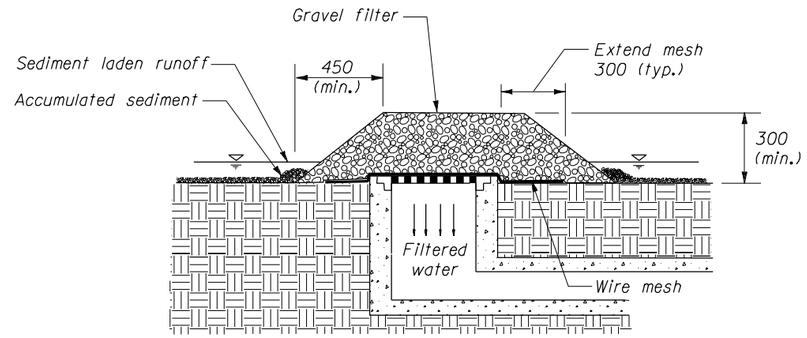

GRAVEL AND WIRE MESH
DROP INLET PROTECTION (TYPE B)

NOTES:

1. Unless otherwise shown, dimensions are in millimeters.
2. For gravel filters use 50 - 75 mm diameter coarse aggregate.
3. Use wire mesh with 12 x 12 mm openings.
4. Use Type A inlet protection in sump locations only.
5. Use Type B inlet protection only in sump locations where heavy concentrated flows are not expected. Do not use where ponding around the structure might cause inconvenience or damage.

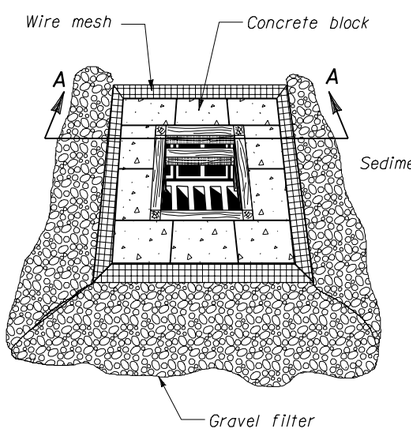

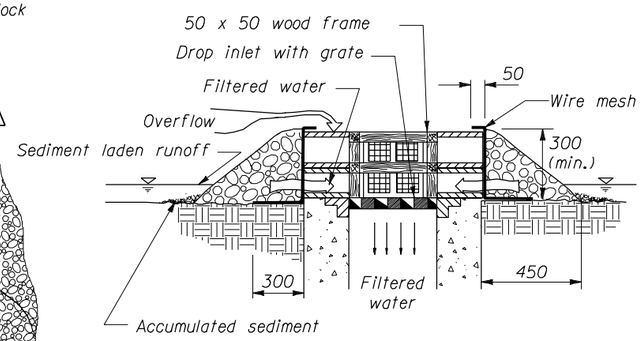

SECTION A-A

BLOCK AND GRAVEL DROP INLET PROTECTION (TYPE C)

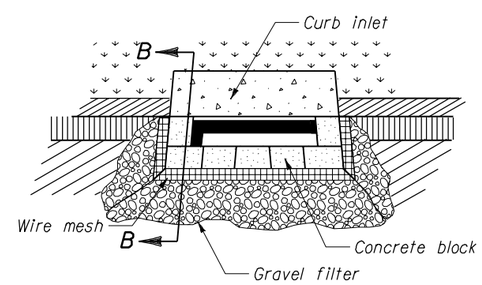

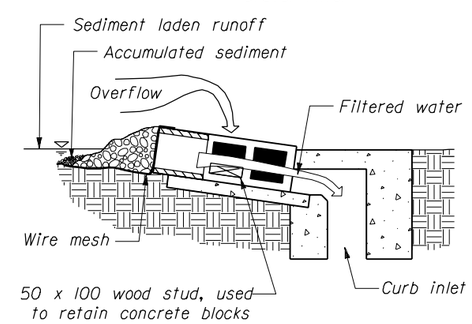

SECTION B-B

CURB INLET PROTECTION,
BLOCK AND GRAVEL (TYPE D)

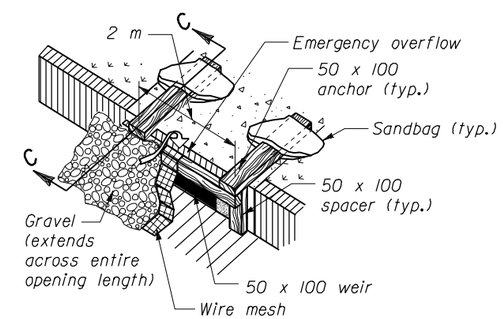

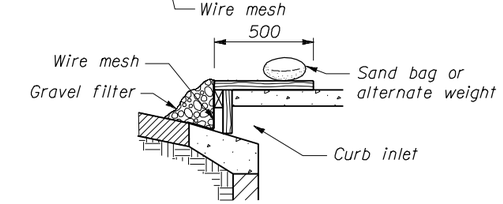

SECTION C-C

CURB INLET PROTECTION,
WOODEN WEIR (TYPE E)

NO SCALE

U.S. DEPARTMENT OF TRANSPORTATION
FEDERAL HIGHWAY ADMINISTRATION
FEDERAL LANDS HIGHWAY

METRIC STANDARD

TEMPORARY
INLET PROTECTION

STANDARD APPROVED FOR USE --/----
REVISED: 07/98

STANDARD
MI57-02

02/27/2003 08:30:03 AMM:\Standard\METRIC\MIST15702.DGN