REG	STATE	PROJECT	SHEET NO.

HEADWALL FOR DOUBLE PIPE CULVERT

DIMENSIONS, REINFORCING STEEL AND CONCRETE TABLE OF QUANTITIES

D	H	SQUARE HEADWALL					15° SKEW					30° SKEW					45° SKEW				
		A	B	L	CONC.	STEEL	A	B	L	CONC.	STEEL	A	B	L	CONC.	STEEL	A	B	L	CONC.	STEEL
mm	m	m	m	m	m^3	kg	m	m	m	m^3	kg	m	m	m	m^3	kg	m	m	m	m^3	kg
1200	1.500	1.2	1.8	4.2	1.55	86	1.3	1.9	4.5	1.60	93	1.4	2.1	4.9	1.79	98	1.7	2.6	6.0	2.19	123
1350	1.575	1.4	2.1	4.9	1.86	101	1.5	2.1	5.1	1.95	103	1.6	2.4	5.6	2.18	115	2.0	3.0	7.0	2.67	145
1500	1.650	1.6	2.3	5.5	2.19	115	1.7	2.4	5.8	2.27	120	1.9	2.6	6.4	2.53	135	2.3	3.2	7.8	3.10	165
1650	1.725	1.8	2.5	6.1	2.52	142	1.9	2.6	6.4	2.60	146	2.1	2.9	7.1	2.90	166	2.6	3.5	8.7	3.56	209
1800	1.800	2.0	2.7	6.7	2.85	156	2.1	2.8	7.0	2.95	165	2.3	3.2	7.8	3.30	187	2.8	3.9	9.5	4.04	232
1950	1.875	2.2	3.0	7.7	3.44	184	2.2	3.1	7.5	3.56	173	2.5	3.4	8.4	3.97	195	3.1	4.2	10.4	4.86	243
2100	1.950	2.4	3.2	8.0	3.64	202	2.4	3.4	8.2	3.77	204	2.7	3.6	9.0	4.21	224	3.4	4.5	11.3	5.15	285
2250	2.025	2.6	3.4	8.6	4.03	217	2.6	3.6	8.8	4.17	221	3.0	3.9	9.9	4.66	250	3.6	4.9	12.1	5.70	308
2400	2.100	2.7	3.6	9.0	4.31	231	2.8	3.7	9.3	4.46	237	3.2	4.2	10.6	4.98	272	3.9	5.2	13.0	6.10	335
2550	2.175	2.9	3.8	9.6	4.73	259	3.0	4.0	10.0	4.90	275	3.4	4.4	11.2	5.47	310	4.2	5.4	13.8	6.69	377
2700	2.250	3.1	4.0	10.2	5.17	282	3.2	4.1	10.5	5.35	292	3.6	4.6	11.8	5.97	330	4.4	5.6	14.4	7.31	400
2850	2.325	3.3	4.1	10.7	5.55	296	3.4	4.3	11.1	5.75	307	3.8	4.7	12.3	6.41	341	4.7	5.9	15.3	7.85	428
3000	2.400	3.5	4.3	11.3	6.02	317	3.6	4.4	11.6	6.23	322	4.0	4.9	12.9	6.95	357	5.0	6.0	16.0	8.63	445
3150	2.475	3.7	4.4	11.8	6.42	349	3.8	4.6	12.2	6.65	361	4.3	5.1	13.7	7.42	406	5.2	6.2	16.6	9.08	488
3300	2.550	3.9	4.6	12.4	6.92	370	4.0	4.7	12.7	7.16	380	4.5	5.3	14.3	7.99	429	5.5	6.5	17.5	9.79	527
3450	2.625	4.1	4.7	12.9	7.35	386	4.2	4.9	13.3	7.60	399	4.7	5.4	14.8	8.49	447	5.8	6.7	18.3	10.39	551
3600	2.700	4.3	4.9	13.5	7.88	425	4.4	5.0	13.8	8.16	436	4.9	5.6	15.4	9.10	487	6.1	6.8	19.0	11.15	606
3750	2.775	4.5	5.0	14.0	8.34	446	4.6	5.2	14.4	8.64	459	5.1	5.8	16.0	9.64	515	6.3	7.1	19.7	11.80	640
3900	2.850	4.6	5.2	14.4	8.73	463	4.8	5.3	14.9	9.04	478	5.4	6.0	16.8	10.08	544	6.6	7.3	20.5	12.34	664
4050	2.925	4.8	5.3	14.9	9.21	501	5.0	5.5	15.5	9.53	523	5.6	6.2	17.4	10.64	590	6.9	7.5	21.3	13.03	725
4200	3.000	5.0	5.5	15.5	9.80	530	5.2	5.6	16.0	10.14	546	5.8	6.3	17.9	11.31	612	7.1	7.8	22.0	13.85	760
4350	3.075	5.2	5.6	16.0	10.30	553	5.4	5.8	16.6	10.66	571	6.0	6.5	18.5	11.90	642	7.4	8.0	22.8	14.60	799
4500	3.150	5.4	5.8	16.6	10.91	576	5.6	6.0	17.2	11.29	598	6.2	6.7	19.1	12.60	661	7.7	8.2	23.6	15.43	822

HEADWALL FOR SINGLE PIPE CULVERT

DIMENSIONS, REINFORCING STEEL AND CONCRETE TABLE OF QUANTITIES

D	H	SQUARE HEADWALL			15° SKEW			30° SKEW			45° SKEW		
		L	CONC.	STEEL	L	CONC.	STEEL	L	CONC.	STEEL	L	CONC.	STEEL
mm	m	m	m^3	kg	m	m^3	kg	m	m^3	kg	m	m^3	kg
1200	1.500	2.4	0.91	49	2.5	0.94	53	2.8	1.05	59	3.4	1.28	70
1350	1.575	2.8	1.11	59	3.0	1.15	64	3.3	1.28	69	4.0	1.57	83
1500	1.650	3.2	1.32	71	3.3	1.37	71	3.7	1.52	80	4.6	1.86	97
1650	1.725	3.6	1.54	91	3.7	1.60	89	4.1	1.78	97	5.1	2.18	120
1800	1.800	4.0	1.78	97	4.1	1.84	99	4.6	2.05	112	5.6	2.51	135
1950	1.875	4.3	1.97	104	4.5	2.04	109	5.0	2.28	121	6.2	2.79	150
2100	1.950	4.7	2.23	124	4.9	2.31	126	5.5	2.58	144	6.7	3.15	175
2250	2.025	5.1	2.47	135	5.3	2.56	140	5.9	2.86	155	7.2	3.50	192
2400	2.100	5.5	2.79	150	5.7	2.88	155	6.3	3.22	170	7.8	3.94	211
2550	2.175	5.9	3.08	170	6.1	3.19	176	6.8	3.56	198	8.3	4.36	241
2700	2.250	6.2	3.33	185	6.5	3.44	193	7.2	3.84	214	8.8	4.70	260
2850	2.325	6.6	3.75	195	6.9	3.88	203	7.7	4.33	231	9.4	5.30	278
3000	2.400	7.0	3.98	210	7.3	4.12	218	8.1	4.60	242	9.9	5.63	293
3150	2.475	7.4	4.38	234	7.7	4.53	246	8.5	5.06	271	10.4	6.19	328
3300	2.550	7.8	4.68	252	8.1	4.85	260	9.0	5.41	292	11.0	6.62	356
3450	2.625	8.2	5.05	270	8.5	5.23	278	9.4	5.84	304	11.5	7.14	376
3600	2.700	8.5	5.36	293	8.8	5.55	302	9.9	6.19	340	12.1	7.58	417
3750	2.775	8.9	5.75	308	9.2	5.95	322	10.3	6.64	360	12.6	8.13	441
3900	2.850	9.3	6.16	328	9.6	6.38	336	10.7	7.12	378	13.2	8.71	467
4050	2.925	9.7	6.58	361	10.0	6.81	370	11.2	7.60	418	13.7	9.31	510
4200	3.000	10.1	7.01	378	10.4	7.26	387	11.6	8.10	435	14.2	9.92	536
4350	3.075	10.4	7.37	392	10.8	7.62	409	12.0	8.51	458	14.8	10.42	566
4500	3.150	10.8	7.82	412	11.2	8.10	429	12.5	9.03	480	15.3	11.06	586

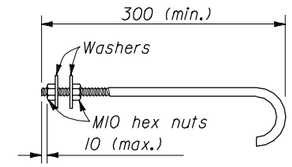

M10 HOOK BOLT DETAILS

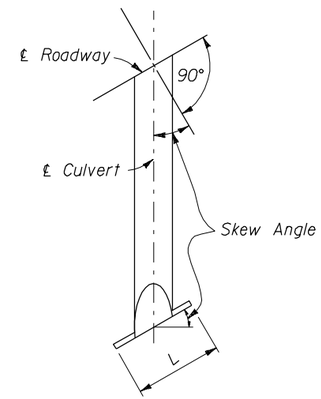

TYPICAL HALF PLAN

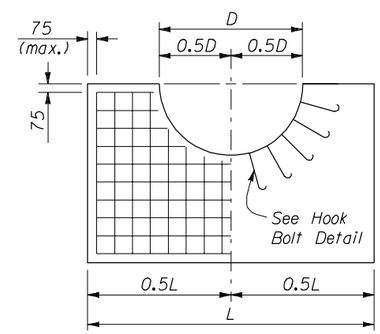

SINGLE PIPE CULVERT

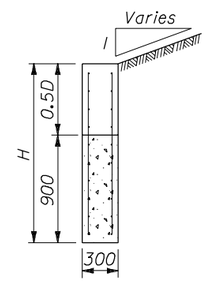

SECTION A-A

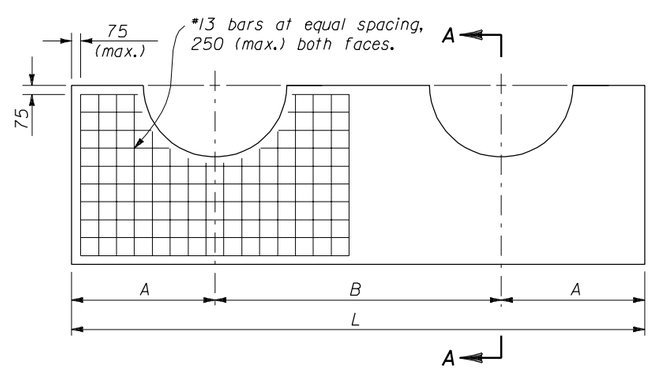

DOUBLE PIPE CULVERT HEADWALLS

NO SCALE

NOTES:

1. Unless otherwise shown, dimensions are in millimeters.
2. Concrete conforms to Section 601. Pour concrete monolithically. Chamfer all exposed edges 20 mm and finish all exposed surfaces with a Class 1 ordinary finish.
3. Clearance for reinforcing steel is 50 mm unless otherwise noted.
4. Headwall dimension "H" may be reduced in solid rock provided the wall is keyed into the rock at least 300 mm. Excavate and backfill according to Section 209.
5. Set hook bolts on nominal 450 mm centers around pipe perimeter at center of headwall. Hook bolts conform to ASTM A307. Galvanize according to ASTM A153.
6. For installations with more than two pipe culverts, increase the dimension "L" and all quantities shown for double pipe installation by adding a length equal to dimension "B" and the incremental change in quantities for each additional pipe culvert.
7. For skews other than those shown, multiply quantities and dimensions "A", "B" & "L" for square headwalls by secant of the skew angle.
8. Final quantities will be determined by using the tables on this standard.
9. Do not order materials until the length, skew angle, and slope bevel in the field have been approved.

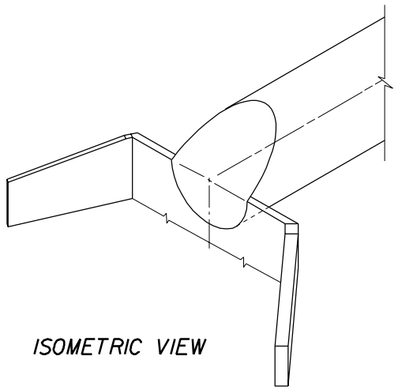

ISOMETRIC VIEW

U.S. DEPARTMENT OF TRANSPORTATION
FEDERAL HIGHWAY ADMINISTRATION
FEDERAL LANDS HIGHWAY

METRIC STANDARD

CONCRETE HEADWALLS

STANDARD APPROVED FOR USE --/----

REVISED: 05/97 07/98

STANDARD M601-01

02/27/2003 08:35:15 AM M:\Standard\METRIC\MST601D1.DGN