REG	STATE	PROJECT	SHEET NO.

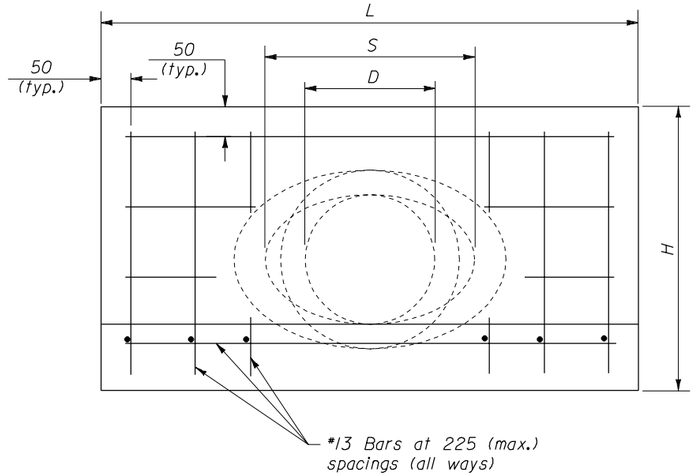

FRONT ELEVATION

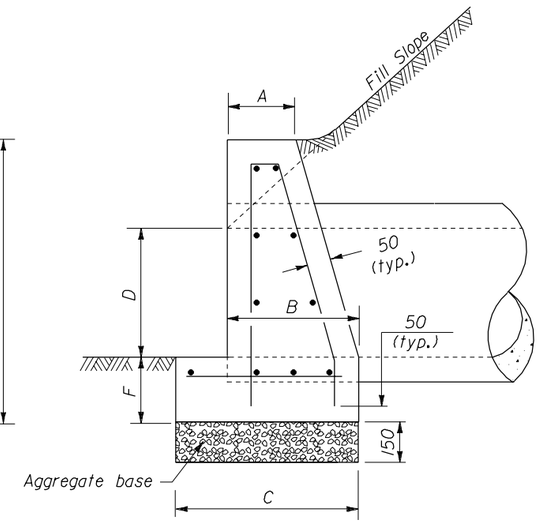

SIDE ELEVATION

NOTES:

1. Unless otherwise shown, dimensions are in millimeters.
2. All headwalls are oriented parallel to the roadway centerline unless otherwise indicated in the plans or by the CO.
3. When pipes are on a skew, adapt and lengthen headwalls as directed.
4. Chamfer all exposed corners not rounded to 20 mm.
5. Quantities shown are for one headwall with pipe at right angles.

HEADWALL FOR CIRCULAR PIPE

	DIAMETER OF PIPE CULVERT					
	300	375	450	525 or 600	675 or 750	825 or 900
A	150	200	225	275	300	300
B	225	325	375	450	525	600
C	350	475	525	650	750	825
D	300	375	450	600	750	900
F	150	200	200	225	225	225
H	600	875	950	1125	1275	1425
L	1100	1500	1800	2400	3000	3600
	CUBIC METERS OF CONCRETE					
Conc. Pipe	0.127	0.359	0.516	0.974	1.528	2.185
C.M. Pipe	0.137	0.379	0.546	1.032	1.624	2.326

HEADWALL FOR ELLIPTICAL PIPE

	SIZE OF ELLIPTICAL PIPE CULVERT (SPAN X RISE)									
	575 X 350	750 X 475	850 X 550	950 X 600	1050 X 675	1125 X 725	1225 X 800	1325 X 850	1500 X 950	1700 X 1075
A	200	225	250	275	275	300	300	300	300	300
B	350	425	450	500	525	550	575	575	575	600
C	500	575	625	700	725	775	800	825	975	1050
D	350	475	550	600	675	725	800	850	950	1075
F	200	200	225	225	225	225	225	225	225	225
H	850	975	1075	1125	1200	1250	1325	1375	1475	1600
L	1625	2150	2550	2750	3050	3275	3625	3875	3900	3900
S	575	750	850	950	1050	1125	1225	1325	1500	1700
	CUBIC METERS OF CONCRETE									
Conc. Pipe	0.378	0.639	0.913	1.119	1.352	1.569	1.876	2.074	2.241	2.363

NO SCALE

U.S. DEPARTMENT OF TRANSPORTATION
FEDERAL HIGHWAY ADMINISTRATION
FEDERAL LANDS HIGHWAY

METRIC STANDARD

CONCRETE HEADWALL FOR SMALL PIPE CULVERT

STANDARD APPROVED FOR USE --/----
REVISED: 08/97 07/98

STANDARD
M601-04

02/27/2003 08:36:30 AM M:\Standard\METRIC\MIST601D4.DGN