REG	STATE	PROJECT	SHEET NO.

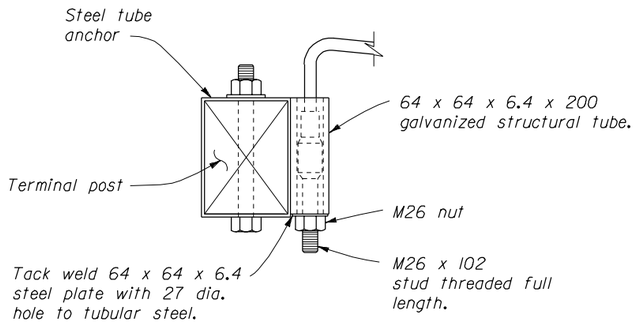

DETAIL A

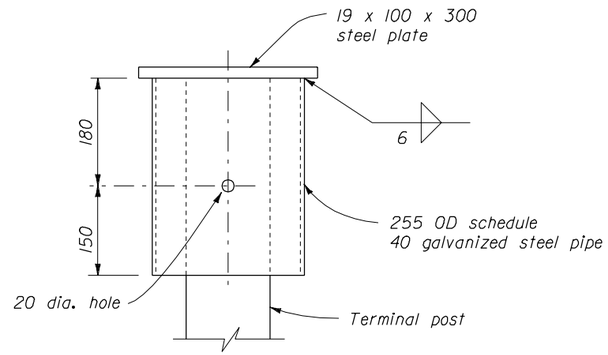

DETAIL B

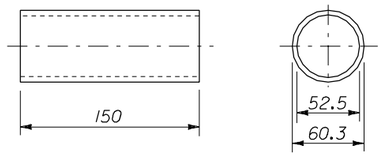

GALVANIZED STANDARD PIPE POST SLEEVE

NOTES:

1. Unless otherwise shown, dimensions are in millimeters.
2. Dimensional tolerances not shown or implied are intended to be those consistent with the proper functioning of the part, including its appearance, and accepted manufacturing practices.
3. Furnish hardware in the metric sizes shown. Equivalent imperial sizes may be used when metric sizes are not available.

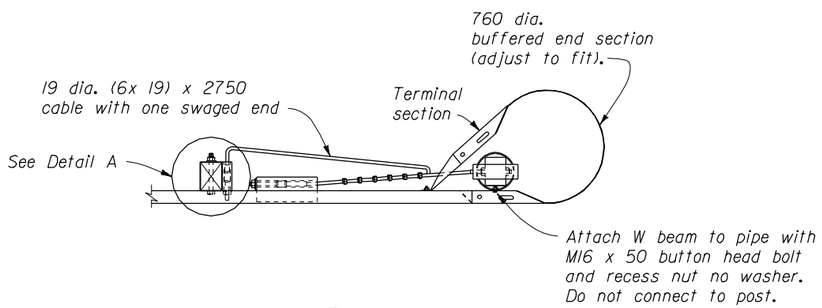

PLAN

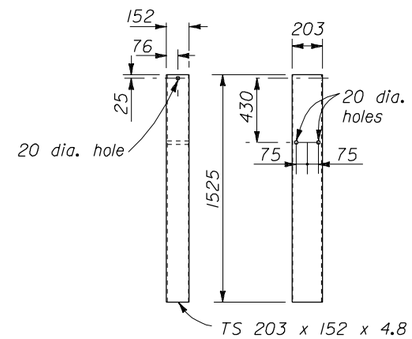

STEEL TUBE ANCHOR

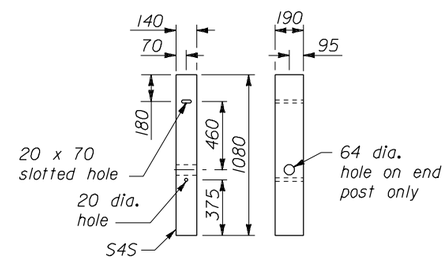

TERMINAL POST

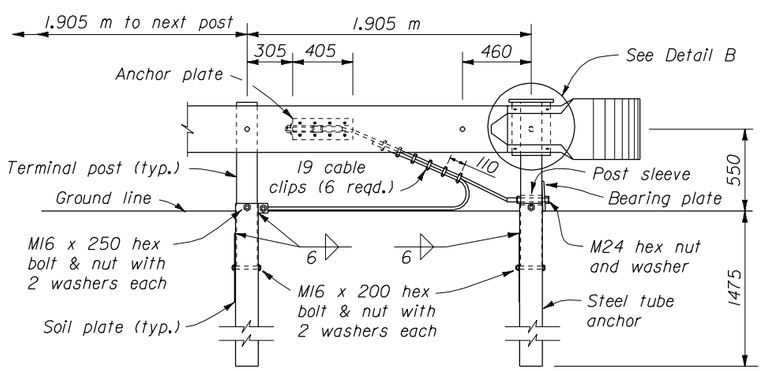

ELEVATION

ANCHORAGE ASSEMBLY

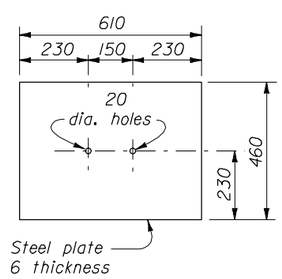

SOIL PLATE

(2 reqd.)

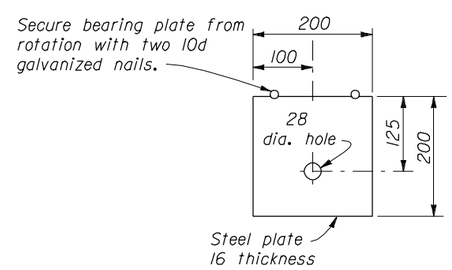

BEARING PLATE

NO SCALE

U.S. DEPARTMENT OF TRANSPORTATION
FEDERAL HIGHWAY ADMINISTRATION
FEDERAL LANDS HIGHWAY

METRIC STANDARD
CRT W BEAM GUARDRAIL
STEEL TUBE ANCHOR
CRT ANCHORAGE ASSEMBLY
CRT POSTS

STANDARD APPROVED FOR USE --/----
REVISED: 07/98

STANDARD
M617-22

02/27/2003 08:53:53 AWM:\Standard\METRIC\MST617 22.DGN