REG	STATE	PROJECT	SHEET NO.

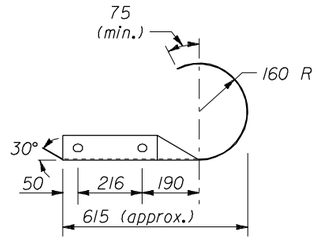

PLAN

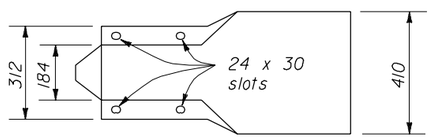

ELEVATION

ROUND END SECTION ASSEMBLY

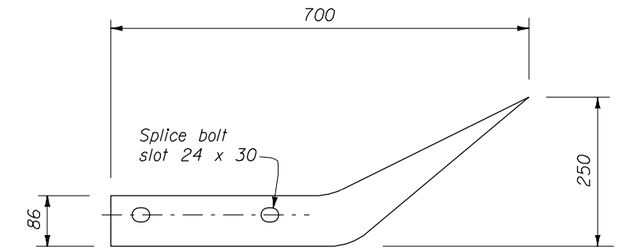

PLAN

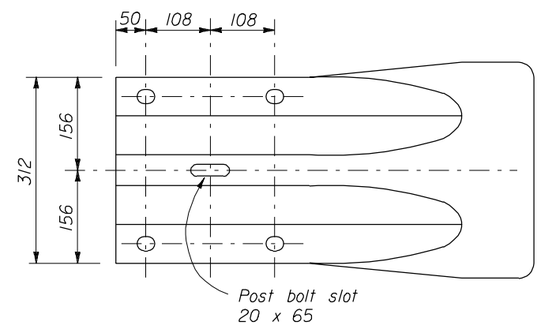

ELEVATION

FLARED END SECTION

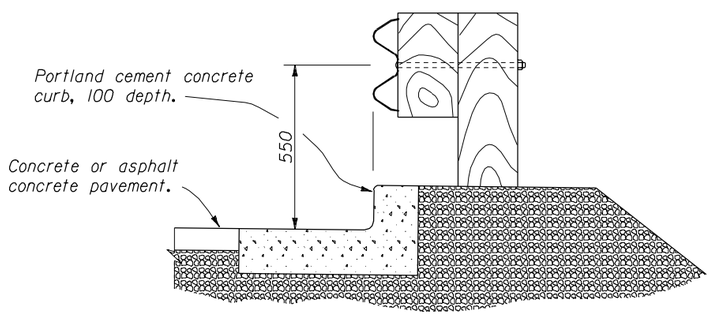

PLACEMENT OF GUARDRAIL
AT CURB AND GUTTER LOCATIONS

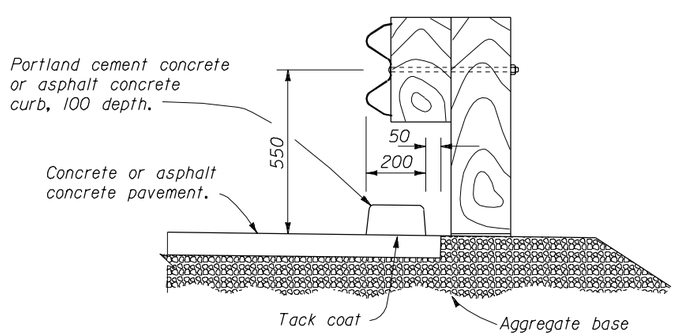

PLACEMENT OF GUARDRAIL
AT CURB LOCATIONS

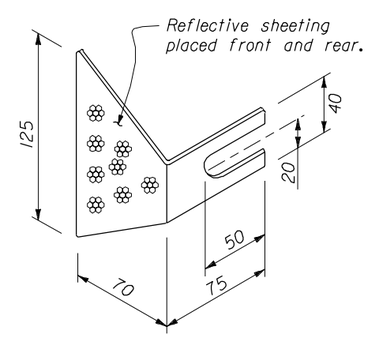

REFLECTOR TAB

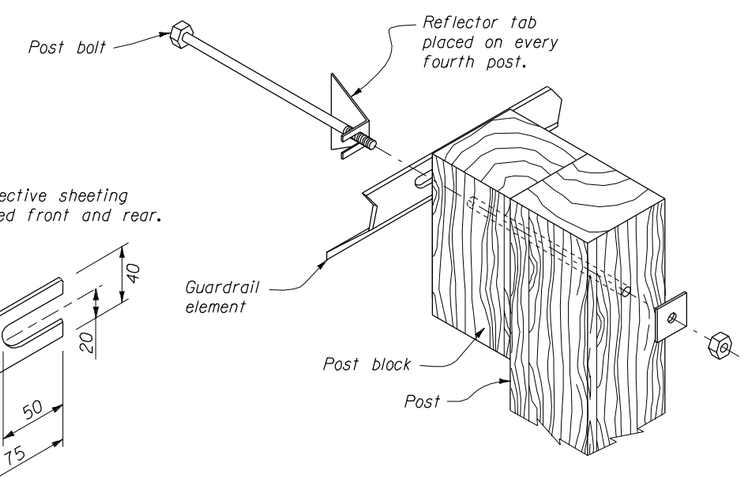

ASSEMBLY DETAIL

NOTES:

1. Unless otherwise shown, dimensions are in millimeters.
2. Dimensional tolerances not shown or implied are intended to be those consistent with the proper functioning of the part, including its appearance, and accepted manufacturing practices
3. Rounded or flared end sections are acceptable alternates to buffered end sections and type I end sections on terminal sections at the trailing ends of guardrail runs on the right side of multilane roadways and where shown on the plans on the left side of multilane roadways.
4. The curb, and curb and gutter shapes shown are for illustration only. Actual curb, and curb and gutter shapes and dimensions will show on the plans.
5. Alternate reflector tab shapes are acceptable.
6. Furnish hardware in the metric sizes shown. Equivalent imperial sizes may be used when metric sizes are not available.

NO SCALE

U.S. DEPARTMENT OF TRANSPORTATION
FEDERAL HIGHWAY ADMINISTRATION
FEDERAL LANDS HIGHWAY

METRIC STANDARD

G4 W BEAM GUARDRAIL SUPPLEMENTARY INSTALLATION DETAILS

STANDARD APPROVED FOR USE --/----

REVISED: 4/29/02

STANDARD
M617-23

02/27/2003 08:54:19 AM M:\Standard\METRIC\MST617 23.DGN