REG	STATE	PROJECT	SHEET NO.

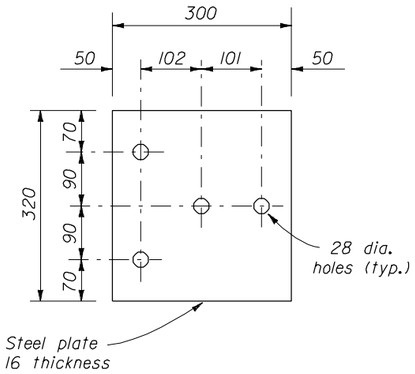

BEARING PLATE

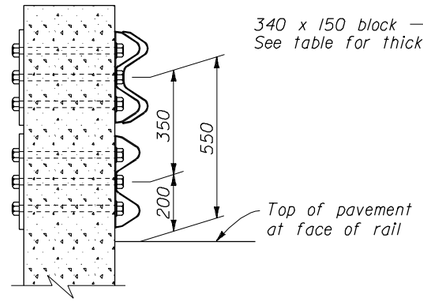

SECTION A-A

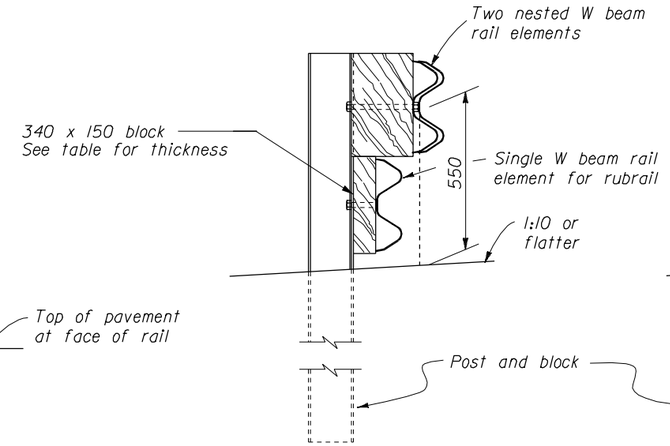

SECTION B-B

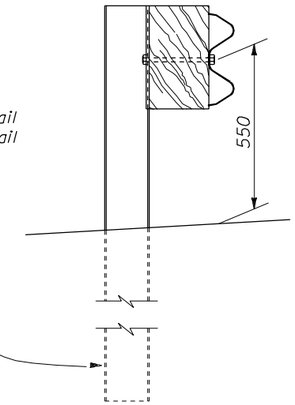

SECTION C-C

NOTES:

1. Unless otherwise shown, dimensions are in millimeters
2. The rubrail may be shop bent in the last 950 mm to facilitate installation.
3. Offset drill wood blocks for rubrail to sit squarely on the post flange posts 1 through 4. Secure blocks to post 1 through 3 with M16 carriage bolts.
4. Posts 1, 2, 3, 4 and 6 require an additional hole to attach wood blocks for rubrail and/or the rubrail.
5. Do not bolt nested W beam or rubrail W beam to posts and blocks on posts 1, 2, 3 and 5. Bolt blocks directly to posts.
6. Reinforced concrete wall or bridge parapet must be capable of developing a 265 kN pull out strength.
7. Furnish hardware in the metric sizes shown. Equivalent imperial sizes may be used when metric sizes are not available.

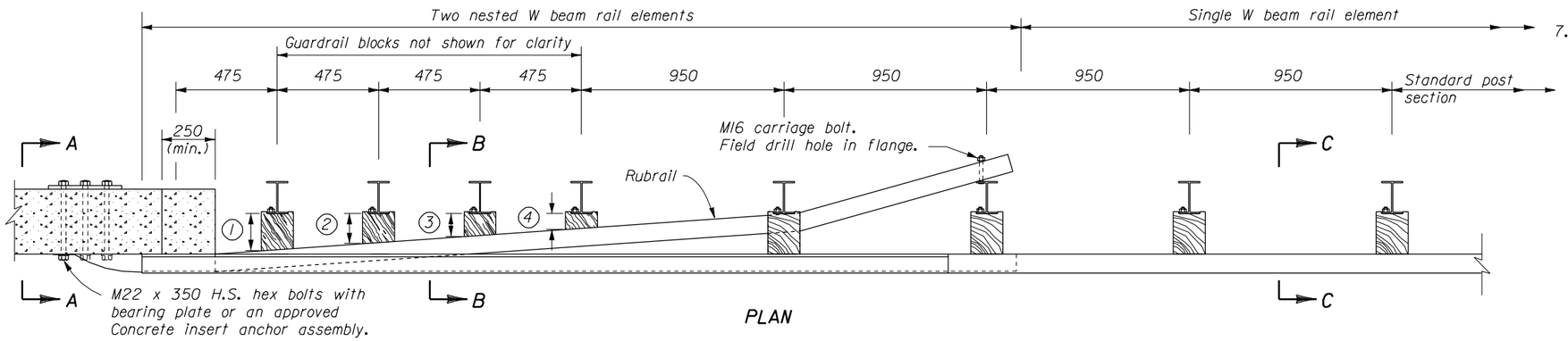

PLAN

WOOD BLOCKS FOR RUBRAIL	
POST	THICKNESS
1	175
2	140
3	110
4	80

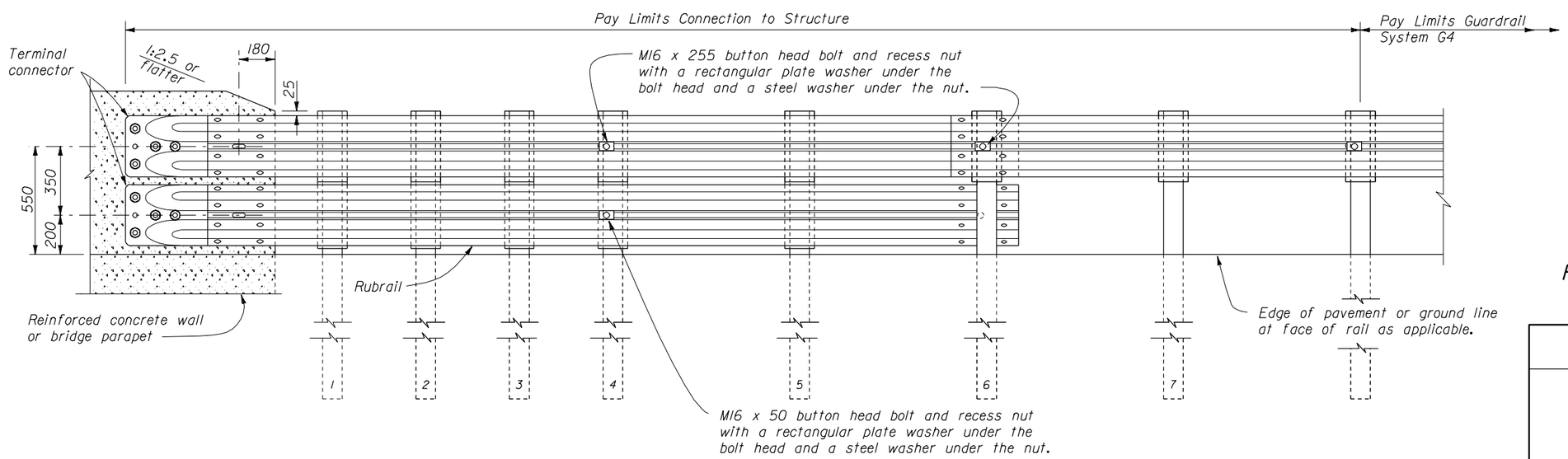

ELEVATION

NO SCALE

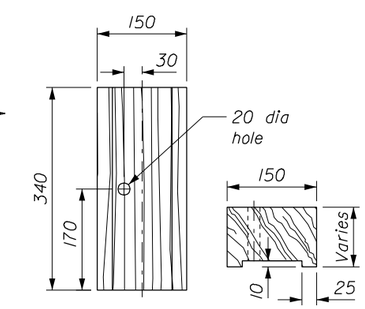

FRONT TOP

WOOD BLOCKOUT FOR RUBRAIL ON STEEL POSTS

U.S. DEPARTMENT OF TRANSPORTATION
FEDERAL HIGHWAY ADMINISTRATION
FEDERAL LANDS HIGHWAY

METRIC STANDARD
G4 BEAM GUARDRAIL
CONNECTION TO STRUCTURE
VERTICAL FACE
STEEL POSTS

STANDARD APPROVED FOR USE --/----
REVISED: 01/98 07/98

STANDARD
M617-26

02/27/2003 08:55:23 AMM:\Standard\METRIC\ms617 26.dgn