REG	STATE	PROJECT	SHEET NO.

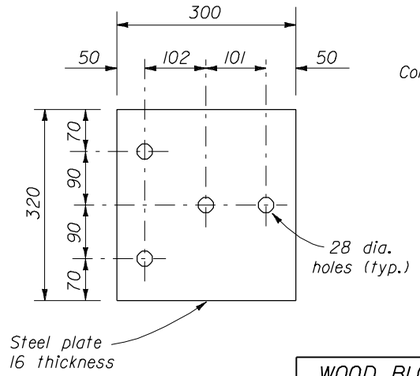

BEARING PLATE

WOOD BLOCKS FOR RUBRAIL	
POST	THICKNESS
1	160
2	120
3	80
4	40

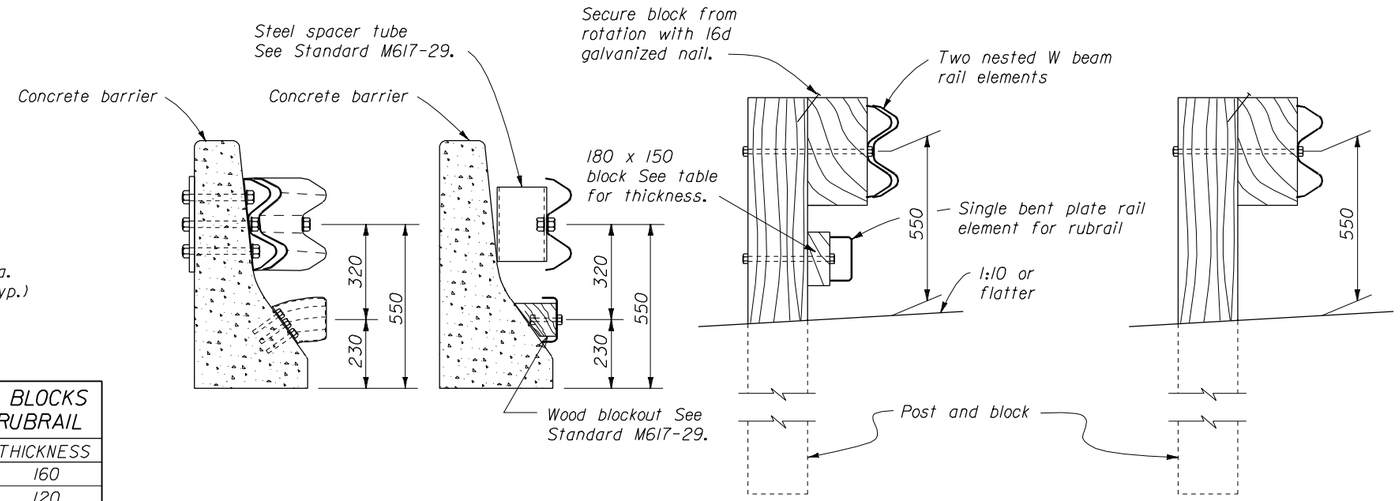

SECTION A-A SECTION A'-A' SECTION B-B SECTION C-C

NOTES:

1. Unless otherwise shown, dimensions are in millimeters.
2. Center drill wood blocks for rubrail, located on posts 1 through 4. Secure blocks 2 and 4 with M16 carriage bolts.
3. Center drill an additional hole on posts 1 through 5 to attach wood blocks to rubrail and/or the rubrail.
4. Do not bolt W beam to posts and blocks at posts 2, 3, 4, 6 and 8. Bolt blocks directly to posts.
5. Reinforced concrete wall or bridge parapet must be capable of developing a 265 kN pull out strength.
6. Furnish hardware in the metric sizes shown. Equivalent imperial sizes may be used when metric sizes are not available.

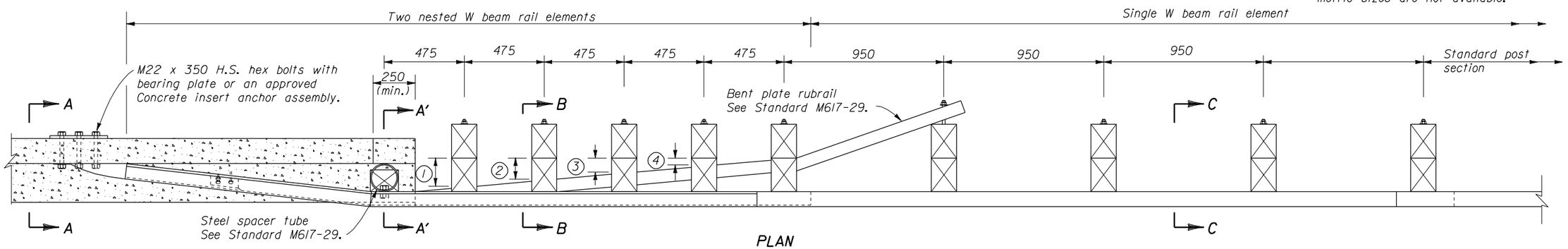

PLAN

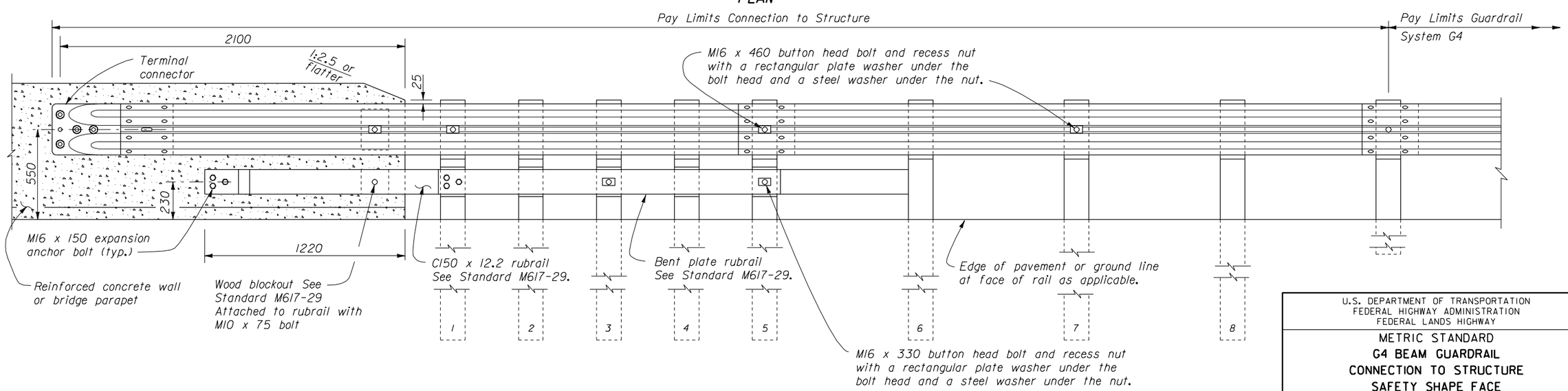

ELEVATION

NO SCALE

U.S. DEPARTMENT OF TRANSPORTATION
FEDERAL HIGHWAY ADMINISTRATION
FEDERAL LANDS HIGHWAY

METRIC STANDARD
G4 BEAM GUARDRAIL
CONNECTION TO STRUCTURE
SAFETY SHAPE FACE
WOOD POSTS

STANDARD APPROVED FOR USE --/----
REVISED: 01/98 07/98

STANDARD
M617-27

02/27/2003 08:55:56 AM M:\Standard\METRIC\nsf617 27.dgn