REG	STATE	PROJECT	SHEET NO.

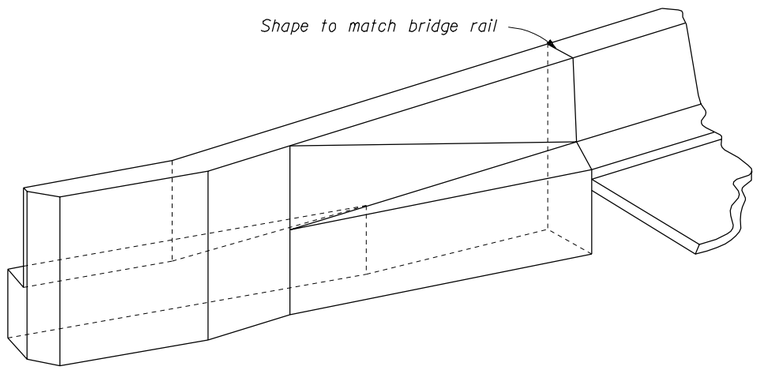

WINGWALL ISOMETRIC

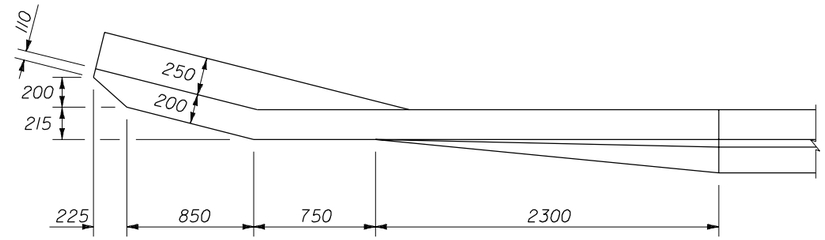

PLAN

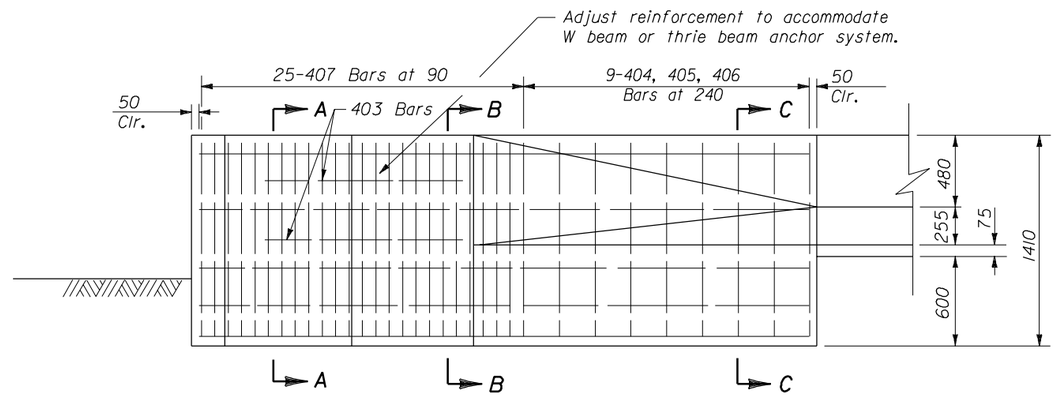

ELEVATION

NOTES:

1. Unless otherwise shown, dimensions are in millimeters.
2. CONCRETE: Structural concrete Class A(AE), with a specified minimum 28-day compressive strength F'c=30 MPa. Vibrate all concrete. Chamfer exposed edges 20 mm unless otherwise shown. Do not use calcium chloride additives in the concrete.
3. The minimum concrete covering to the face of any bar is 40 mm unless otherwise shown. All bars are #13.
4. FINISHING CONCRETE: Give all concrete surfaces a Class I finish except as specified in the Special Contract Requirements.

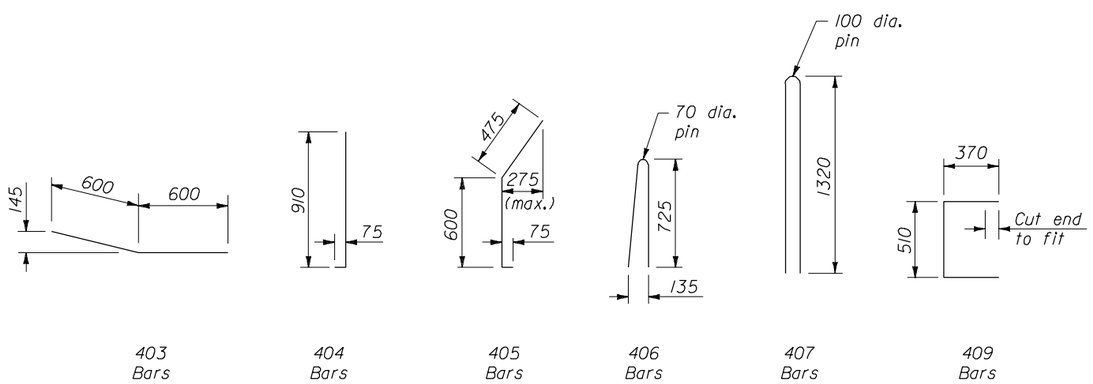

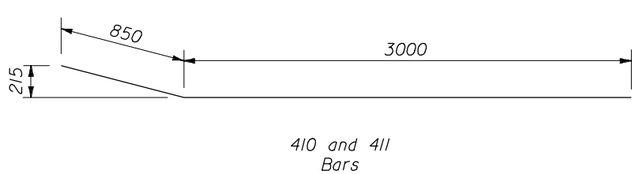

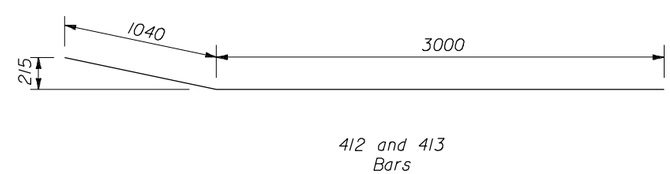

REINFORCING BAR DETAILS

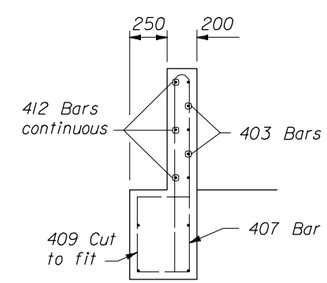

SECTION A-A

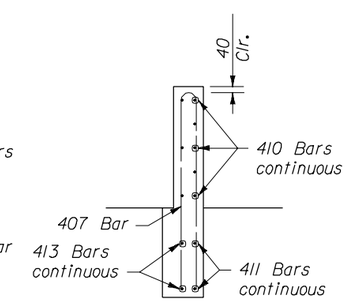

SECTION B-B

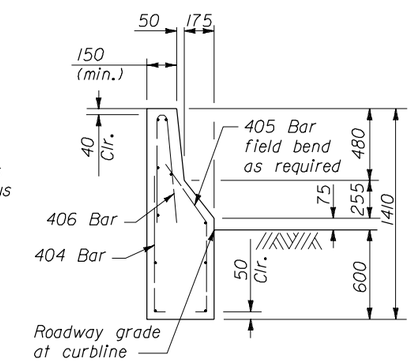

SECTION C-C

NO SCALE

U.S. DEPARTMENT OF TRANSPORTATION
FEDERAL HIGHWAY ADMINISTRATION
FEDERAL LANDS HIGHWAY

METRIC STANDARD
G4 W BEAM GUARDRAIL
FLARED BACK
PARAPET WALL AND
SAFETY SHAPE TRANSITION

STANDARD APPROVED FOR USE --/----
REVISED: 05/97 07/98

STANDARD
M617-32

02/27/2003 08:59:41 AM M:\Standard\METRIC\MST617 32.DGN