REG	STATE	PROJECT	SHEET NO.

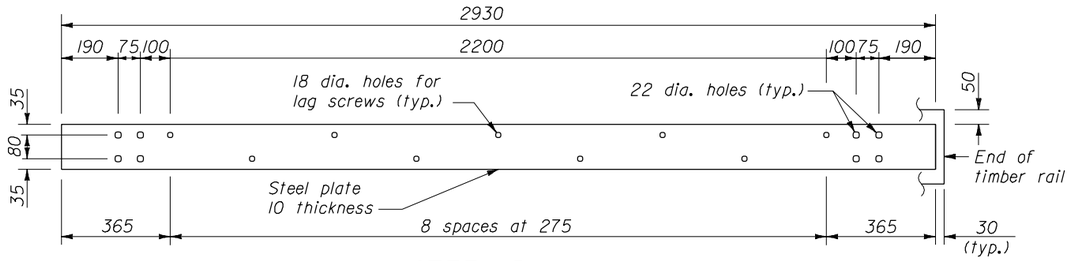

STEEL RAIL

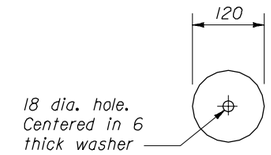

PLATE WASHER

NOTE:

1. Dimensions not labeled are in millimeters.
2. Use the Type A, blocked-out, system or the Type B, non-blocked-out, system as specified.
3. Use weathering steel for all structural steel and fastener hardware as specified.
4. Place a terminal section (See Standards M617-61 and M617-62) on both approach and trailing ends of barrier installations.
5. Furnish hardware in the metric sizes shown. Equivalent imperial sizes may be used when metric sizes are not available.

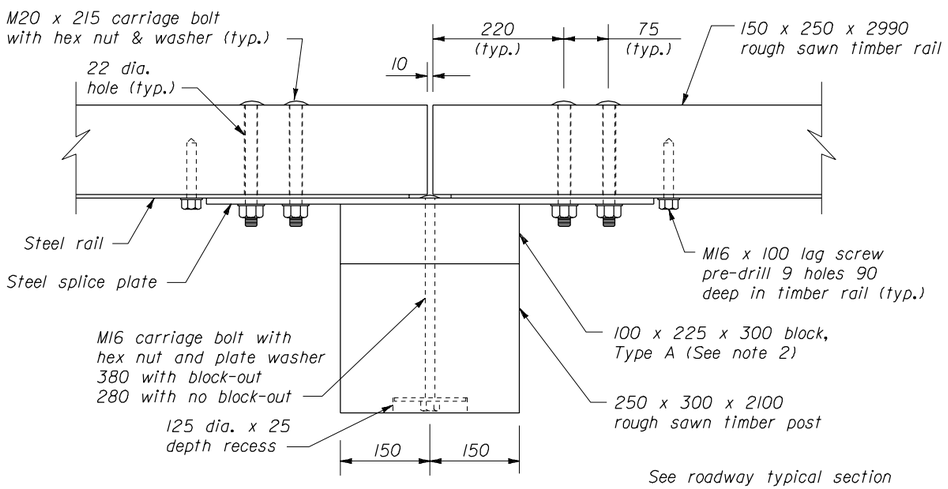

PLAN

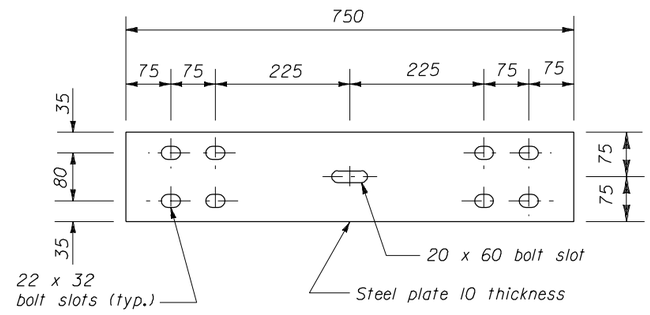

STEEL SPLICE PLATE

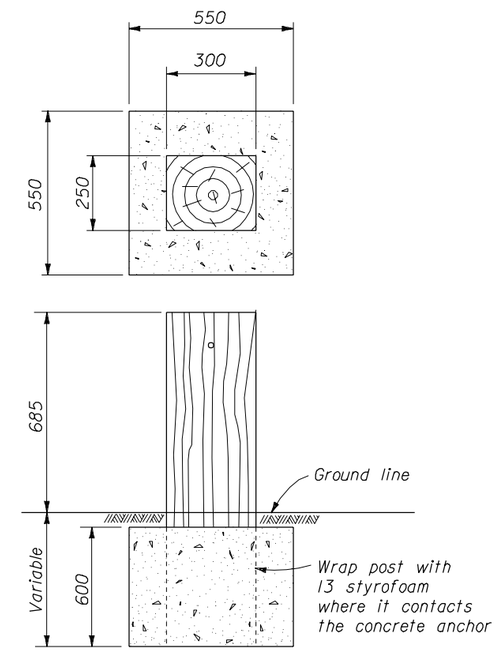

Use 650 mm diameter round anchor or 600 mm square anchor. Reduced size acceptable in solid rock.

CONCRETE ANCHOR FOR SHORT GUARDRAIL POST

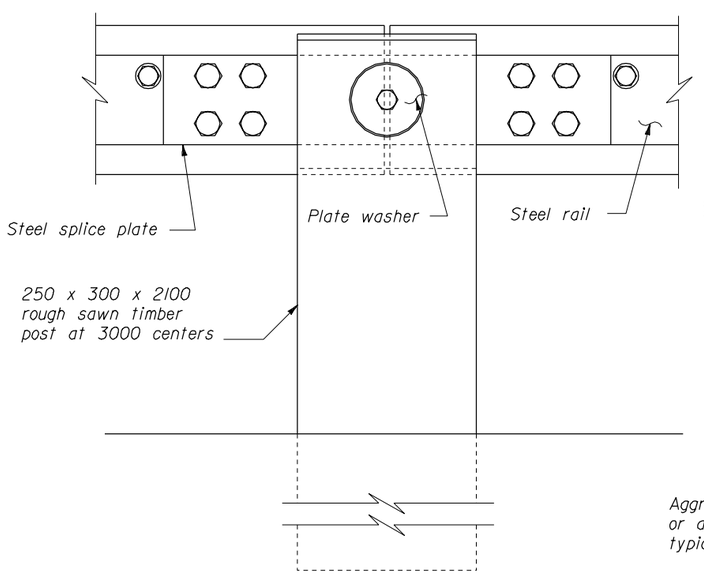

ELEVATION

POST CONNECTION

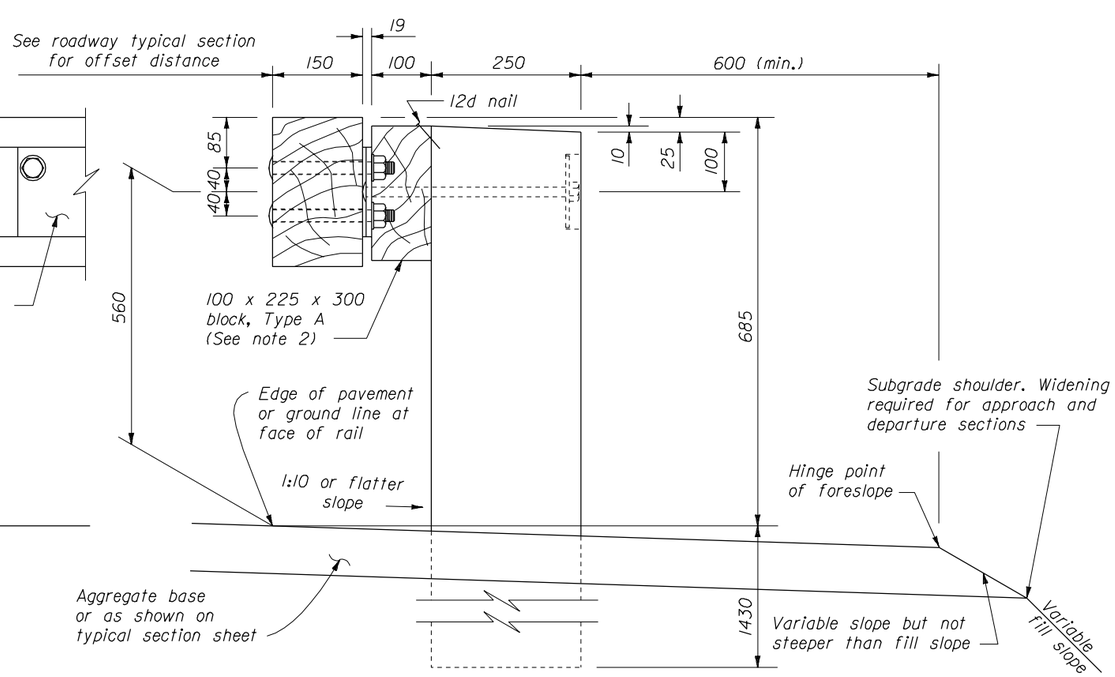

TYPICAL GUARDRAIL CROSS SECTION

NO SCALE

U.S. DEPARTMENT OF TRANSPORTATION
FEDERAL HIGHWAY ADMINISTRATION
FEDERAL LANDS HIGHWAY

METRIC STANDARD

STEEL-BACKED TIMBER GUARDRAIL, TYPE A & TYPE B

STANDARD APPROVED FOR USE --/----

REVISED: 06/97 07/98

STANDARD M617-60

02/27/2003 09:00:02 AM M:\Standard\METRIC\MST6\760.DGN