| REG | STATE | PROJECT | SHEET NO. |
|---|---|---|---|
| | | | |

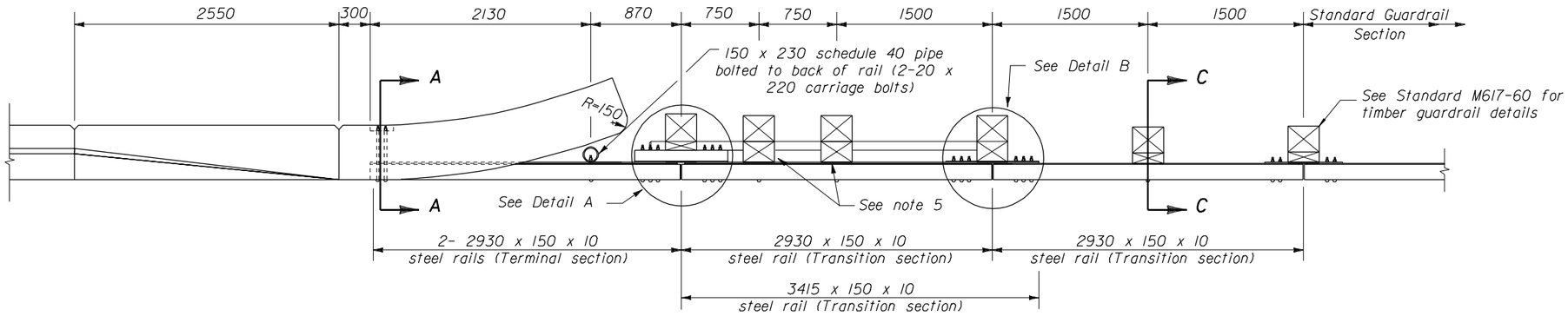


PLAN

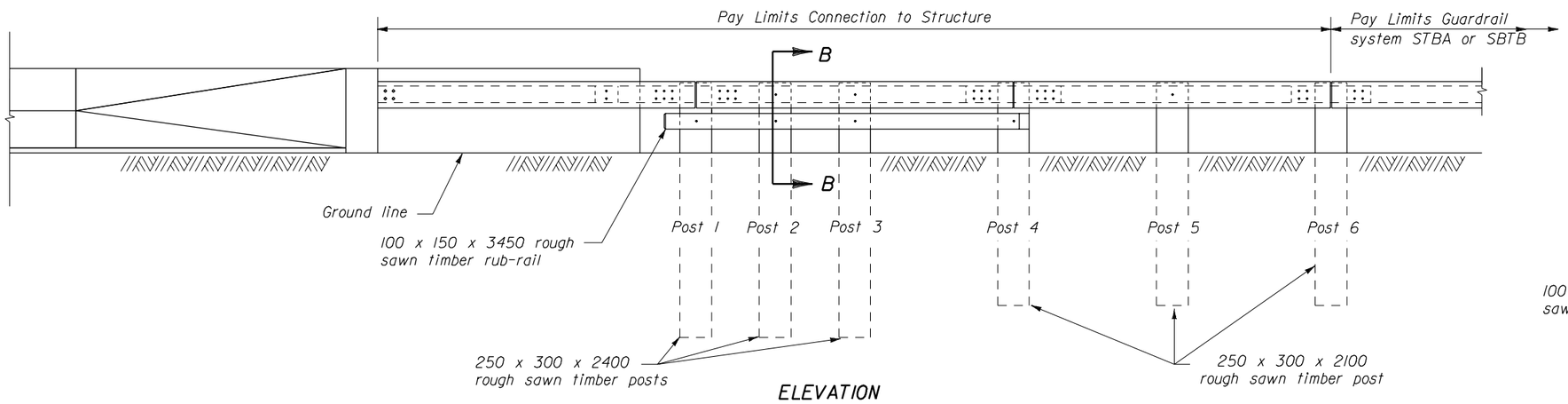


ELEVATION

NOTES:

1. Unless otherwise shown, dimensions are in millimeters.
2. See Standard M617-66 for Sections A-A through C-C, steel rail layouts, and other details.
3. Use weathering steel for all structural steel and fastener hardware.
4. Drill the bolt pattern for structural steel tube to match the pattern for the splice plate shown on Standard M617-66.
5. For posts 2 and 3, use a 200 x 225 x 300 mm block for the blockout, and an M16 x 650 mm carriage bolt with hex nut and plate washer.
6. Furnish hardware in the metric sizes shown. Equivalent imperial sizes may be used when metric sizes are not available.

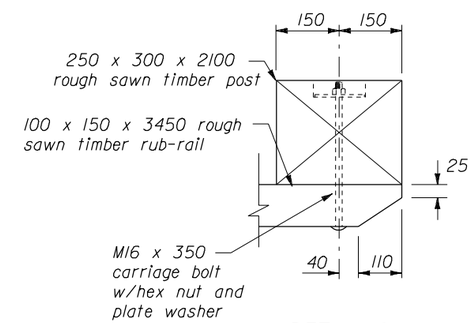


DETAIL C

RUB-RAIL CONNECTION

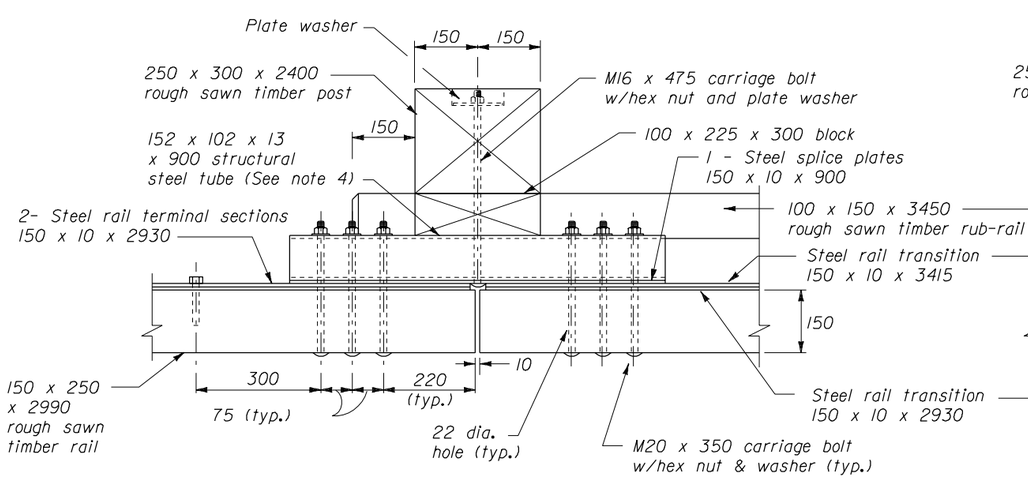


DETAIL A

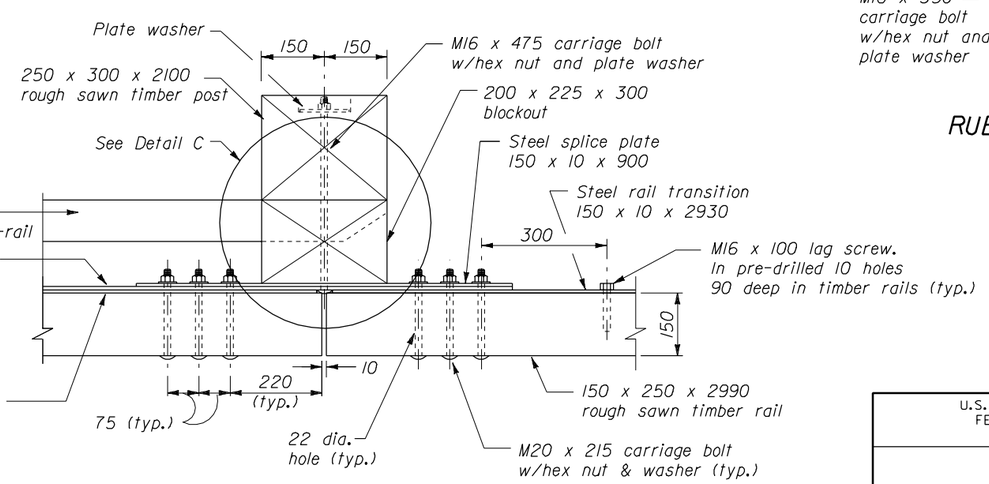


DETAIL B

POST CONNECTION

NO SCALE

U.S. DEPARTMENT OF TRANSPORTATION
FEDERAL HIGHWAY ADMINISTRATION
FEDERAL LANDS HIGHWAY

METRIC STANDARD

# STEEL-BACKED TIMBER GUARDRAIL CONNECTION TO STRUCTURE

STANDARD APPROVED FOR USE --/----

REVISED:

STANDARD M617-65

02/27/2003 09:01:31 AM M:\Standard\METRIC\MSTD\765.DGN