REG	STATE	PROJECT	SHEET NO.

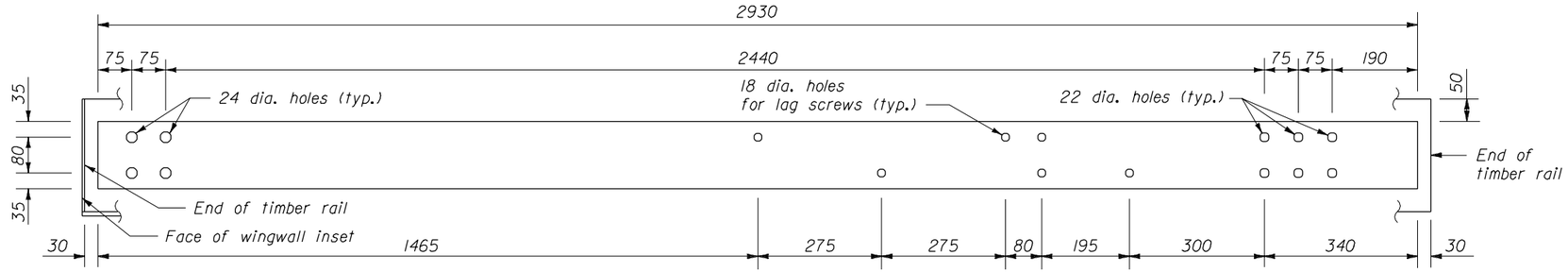

TERMINAL SECTION 150 x 10 x 2930 mm

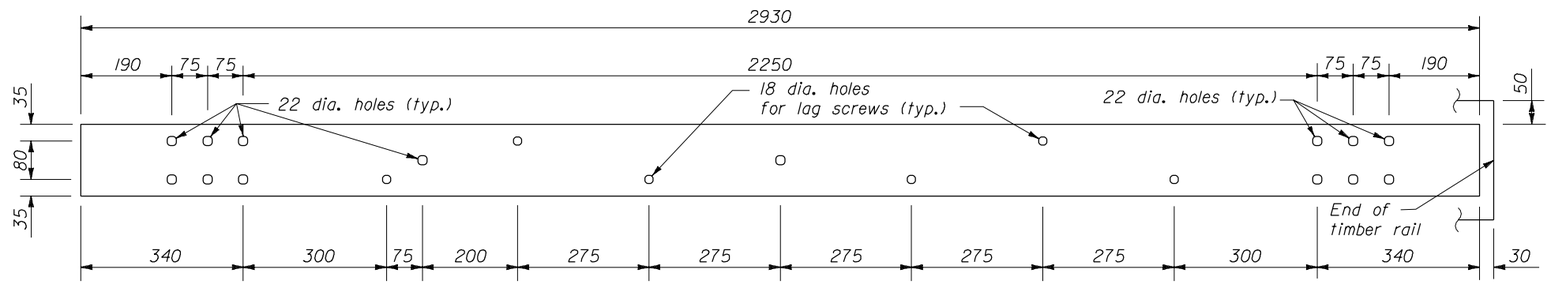

TRANSITION SECTION 150 x 10 x 2930 mm

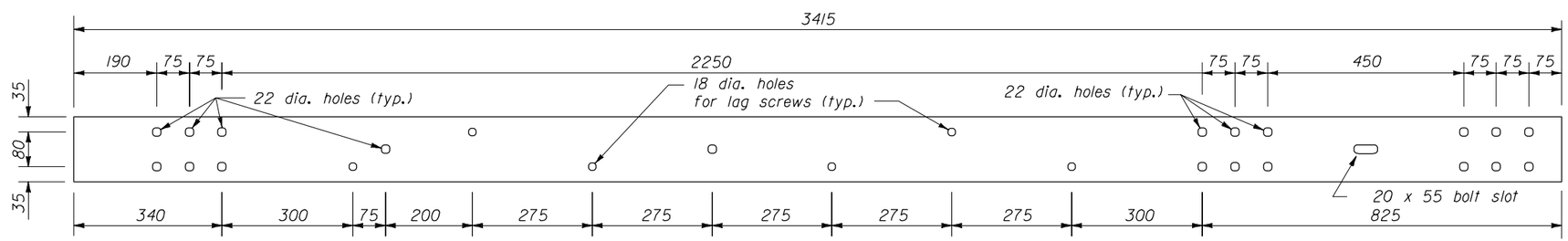

TRANSITION SECTION 150 x 10 x 3415 mm

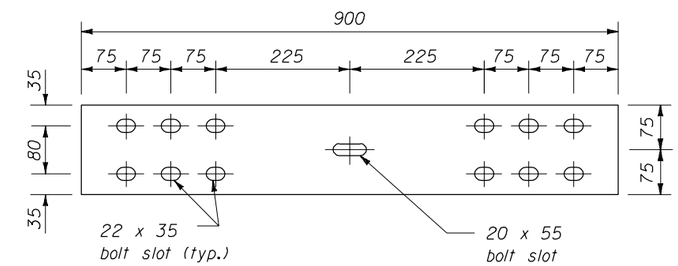

STEEL SPLICE PLATE
150 x 10 x 900 mm

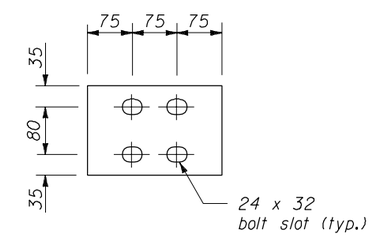

STEEL BEARING PLATE
150 x 10 x 225 mm

NOTES:

1. Unless otherwise shown, dimensions are in millimeters.
2. Pre-drill 18 mm holes in blocks outs and posts.
3. Furnish hardware in the metric sizes shown. Equivalent imperial sizes may be used when metric sizes are not available.

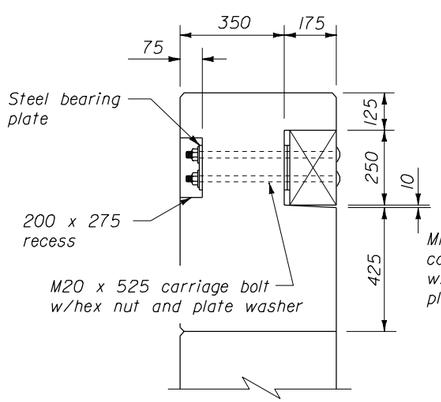

SECTION A-A

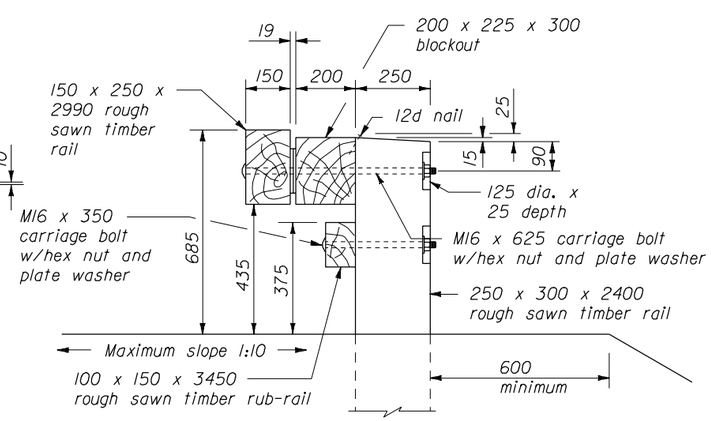

SECTION B-B

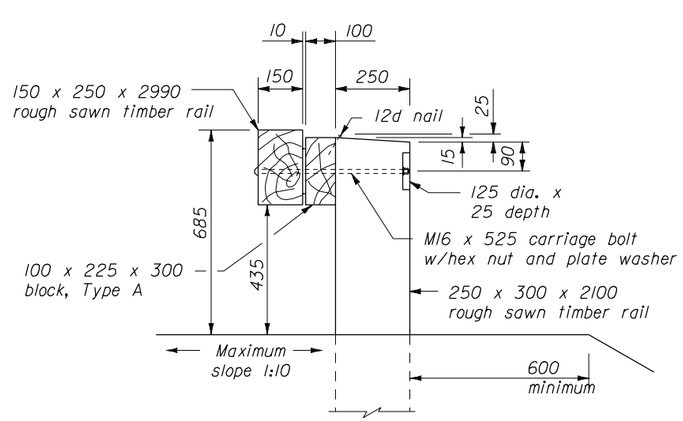

SECTION C-C

NO SCALE

U.S. DEPARTMENT OF TRANSPORTATION
FEDERAL HIGHWAY ADMINISTRATION
FEDERAL LANDS HIGHWAY

METRIC STANDARD

STEEL-BACKED TIMBER GUARDRAIL CONNECTION TO STRUCTURE

STANDARD APPROVED FOR USE --/----
REVISED: 07/98

STANDARD
M617-66

02/27/2003 09:02:42 AM M:\Standard\METRIC\MST6766.DGN