REG	STATE	PROJECT	SHEET NO.

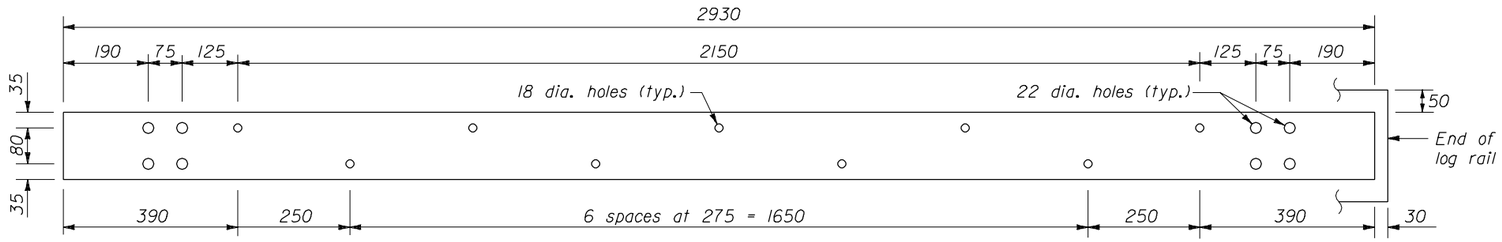

STEEL RAIL
150 x 10 x 2930 mm

NOTES:

1. Unless otherwise shown, dimensions are in millimeters.
2. For details of the cast block-out and general notes for Steel-Backed Log Guardrail See Standard M617-81.
3. Furnish hardware in the metric sizes shown. Equivalent imperial sizes may be used when metric sizes are not available.

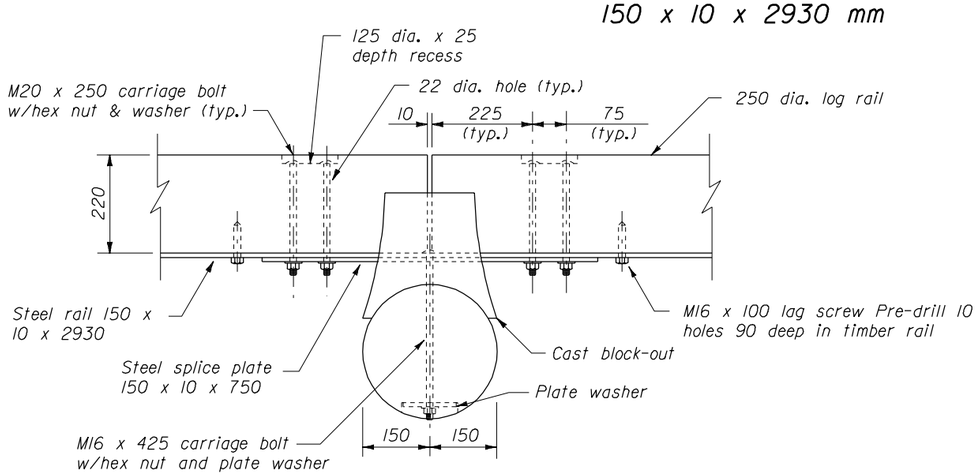

PLAN

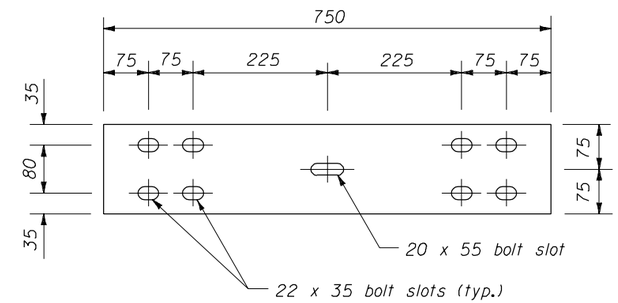

STEEL SPLICE PLATE
150 X 10 X 750 mm

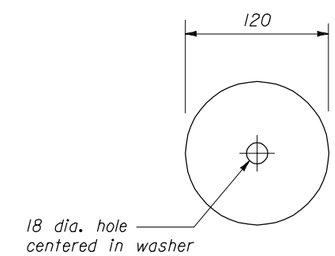

PLATE WASHER
120 mm Dia. 6 mm

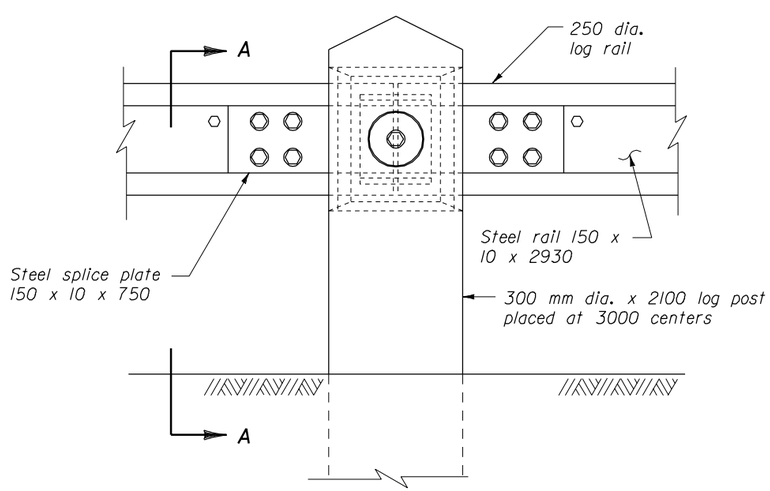

ELEVATION

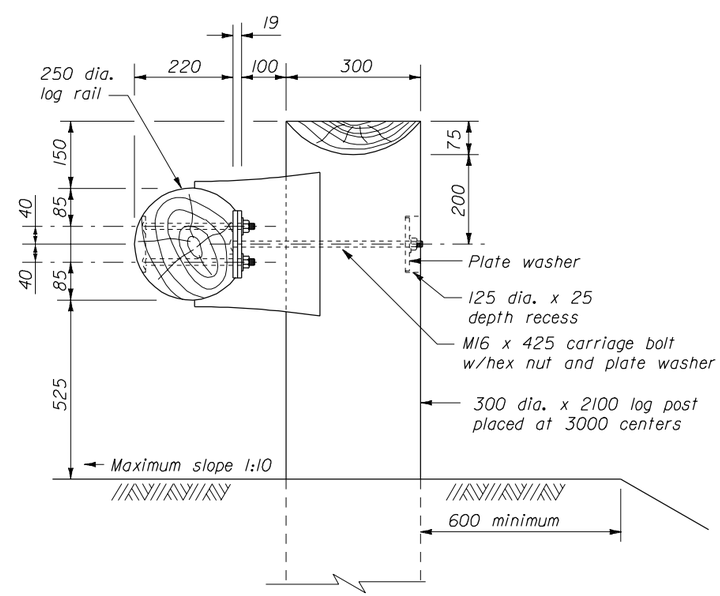

SECTION A-A

POST CONNECTION

NO SCALE

U.S. DEPARTMENT OF TRANSPORTATION
FEDERAL HIGHWAY ADMINISTRATION
FEDERAL LANDS HIGHWAY

METRIC STANDARD

STEEL-BACKED LOG RAIL

STANDARD APPROVED FOR USE --/----
REVISED: 07/98

STANDARD
M617-80

02/27/2003 09:03:00 AM M:\Standard\METRIC\MST6178D.DGN