REG	STATE	PROJECT	SHEET NO.

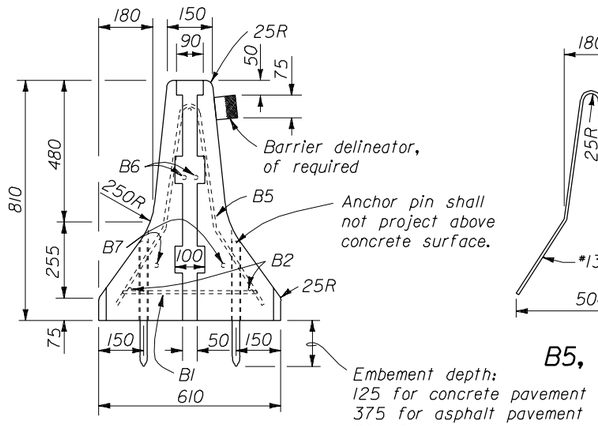

VIEW A-A

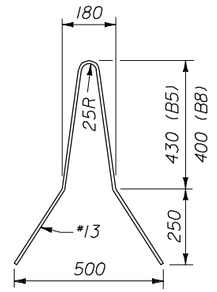

B5, B8

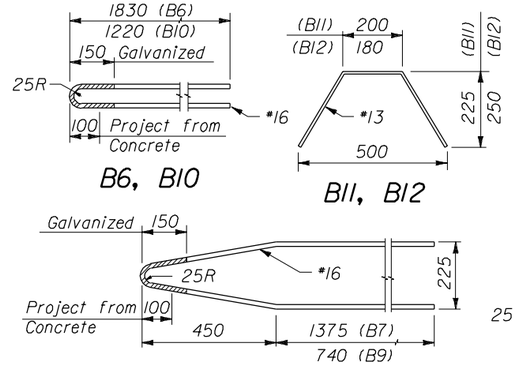

B6, B10

B11, B12

B7, B9

REINFORCING STEEL DETAILS

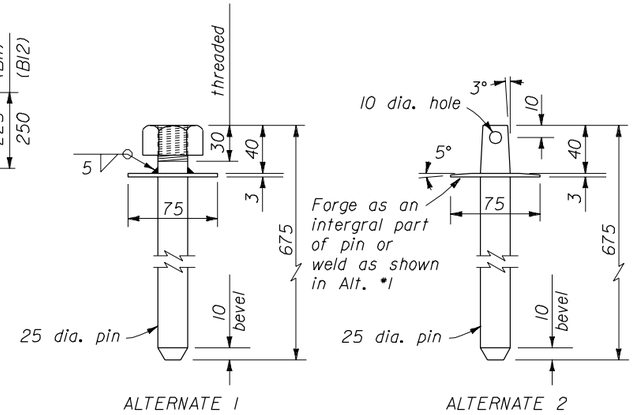

CONNECTING PINS

NOTES:

1. Unless otherwise shown, dimensions are in millimeters.
2. Provide for a clear cover of 50 mm for all reinforcing steel except as noted.
3. Galvanize connecting pin and area shown on reinforcement bars B6, B7, B9, and B10 in accordance with AASHTO M232 after fabrication.
4. Embedded inserts may be used for lifting and handling. Submit details for the inserts for approval.

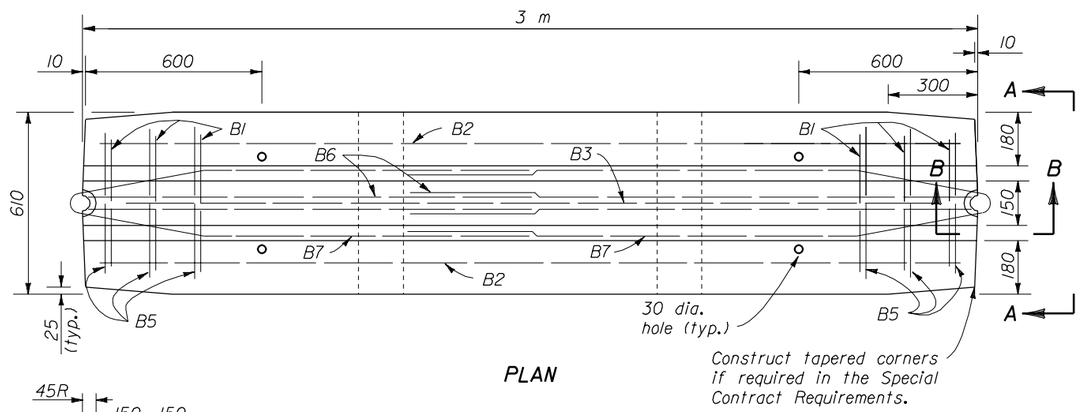

PLAN

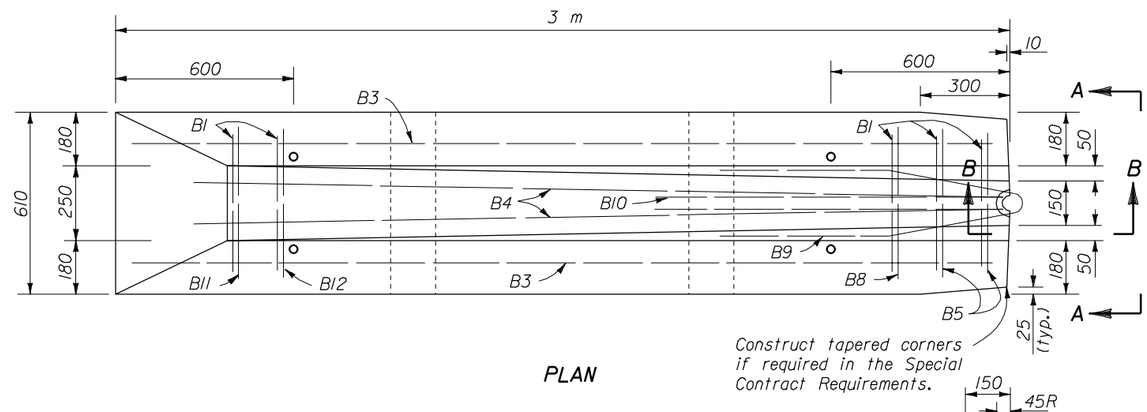

PLAN

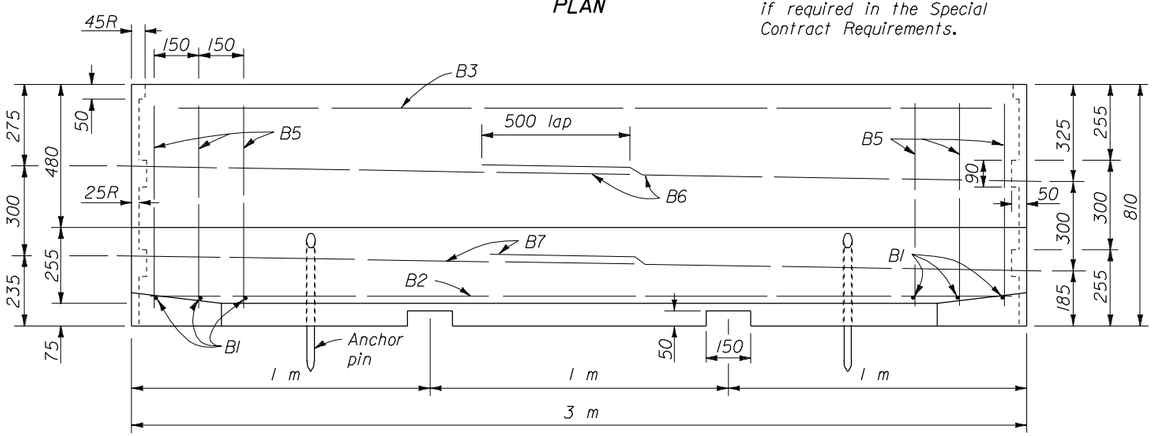

ELEVATION
BARRIER SECTION

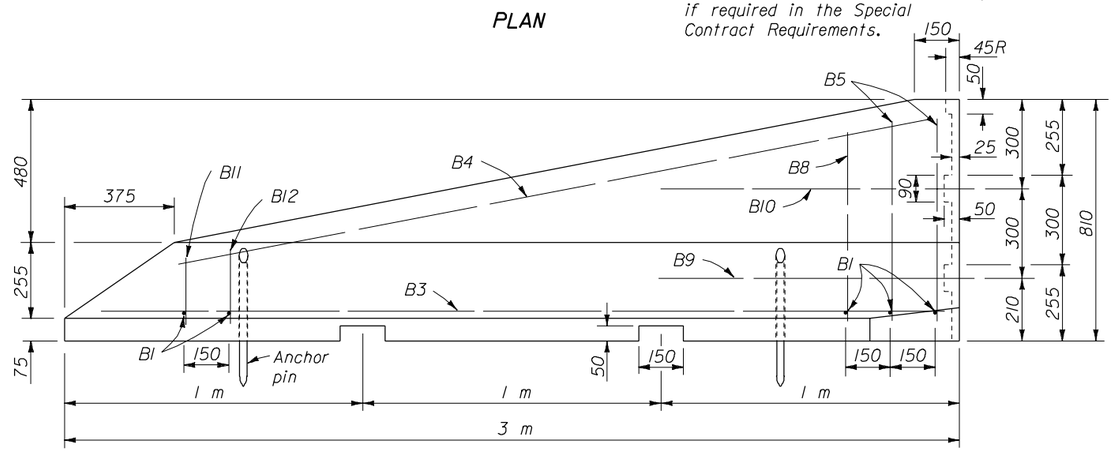

ELEVATION
TERMINAL SECTION

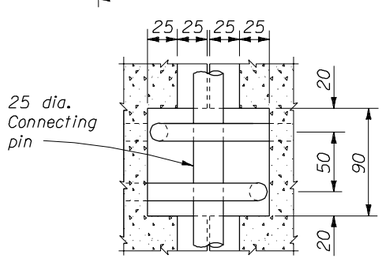

SECTION B-B

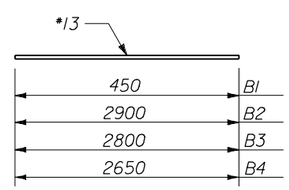

B1, B2, B3, B4

NO SCALE

U.S. DEPARTMENT OF TRANSPORTATION
FEDERAL HIGHWAY ADMINISTRATION
FEDERAL LANDS HIGHWAY

METRIC STANDARD

CONCRETE BARRIER

STANDARD APPROVED FOR USE --/----

REVISED: 05/97 07/98

STANDARD
M618-01

02/27/2003 09:03:33 AMM:\Standard\METRIC\msf6801.dgn