REG	STATE	PROJECT	SHEET NO.

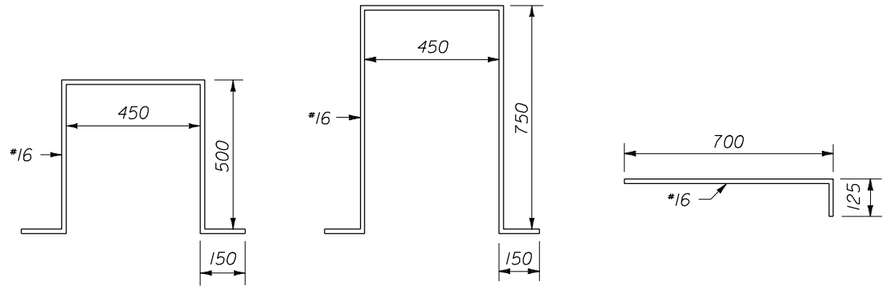

W1 BARS W2 BARS W3 BARS

BENDING DIAGRAMS

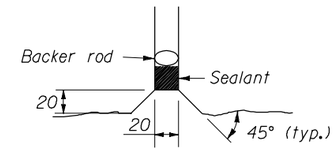

REAL JOINTS DETAIL

NOTES:

1. Unless otherwise shown, dimensions are in millimeters.
2. Each unit consists of three segments each of which have a different random masonry pattern as shown. All three segments are to interlock with each other to vary the order.
3. Sealant for the real joint covers the perimeter joint of the capstone, sides, and top and sides of the footing.
4. Precast the entire wall section, no cast-in-place is allowed.
5. Minimum concrete cover 50 mm unless shown otherwise.

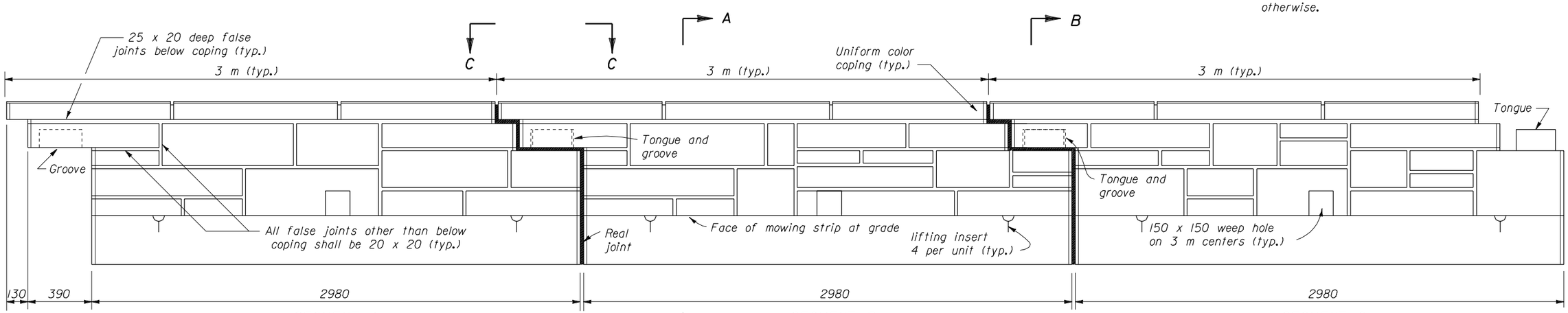

ELEVATION

PRECAST CONCRETE GUARDWALL

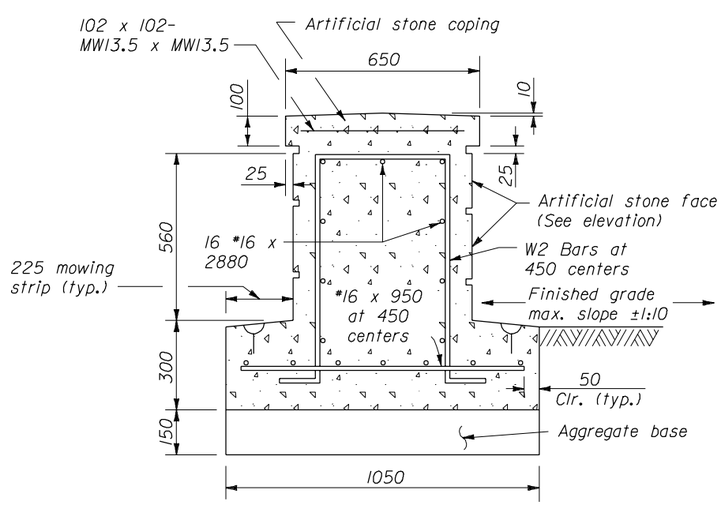

SECTION A-A

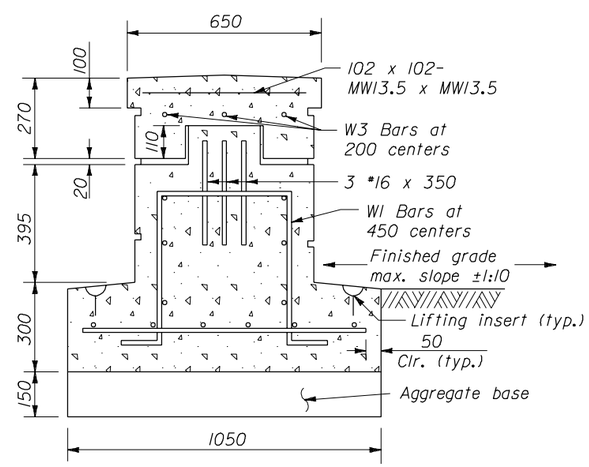

SECTION B-B

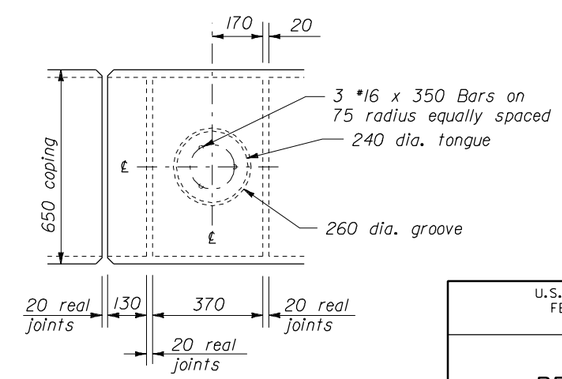

VIEW C-C

NO SCALE

U.S. DEPARTMENT OF TRANSPORTATION
FEDERAL HIGHWAY ADMINISTRATION
FEDERAL LANDS HIGHWAY

METRIC STANDARD

PRECAST CONCRETE GUARDWALL, TYPE I

STANDARD APPROVED FOR USE --/----
REVISED: 06/97 07/98

STANDARD M618-02

02/27/2003 09:03:49 AM M:\Standard\METRIC\MST6\802.DGN