REG	STATE	PROJECT	SHEET NO.

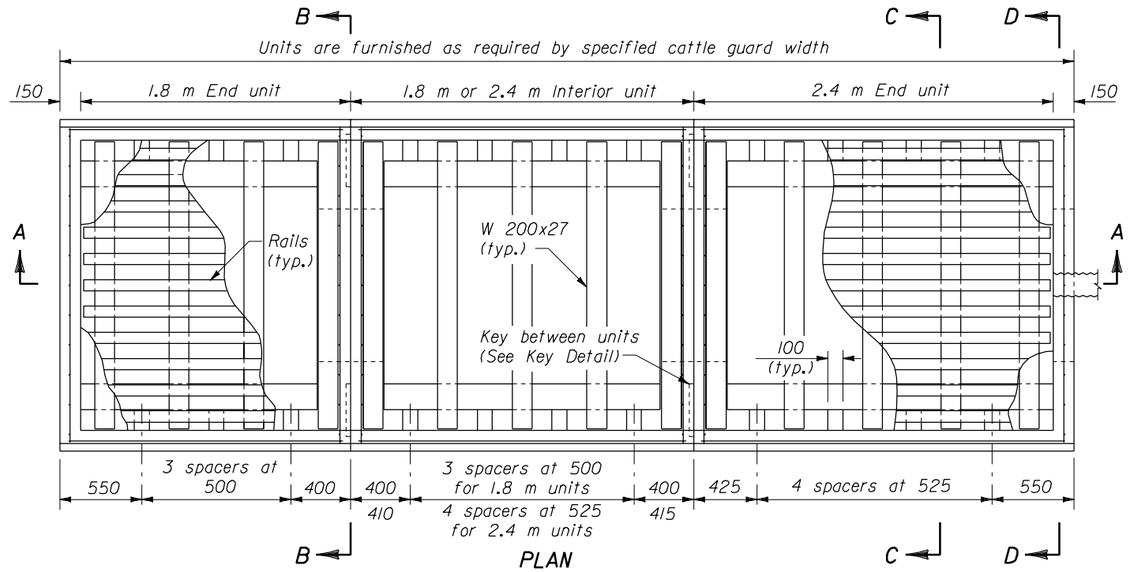

PLAN

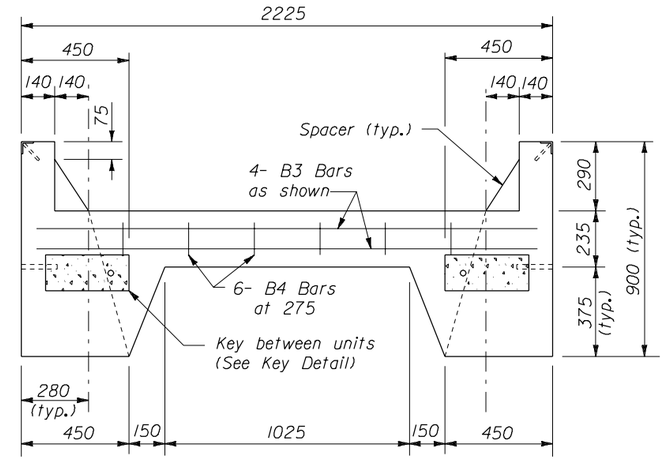

SECTION B-B

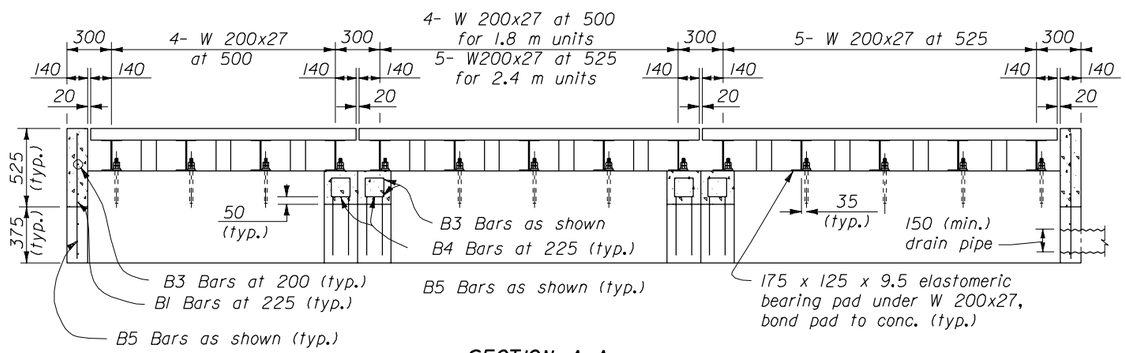

SECTION A-A

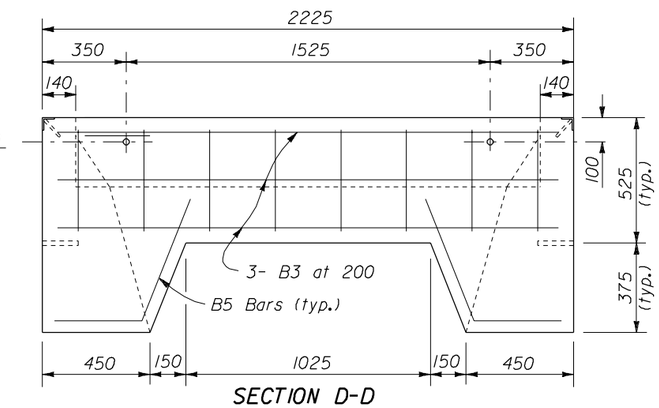

SECTION D-D

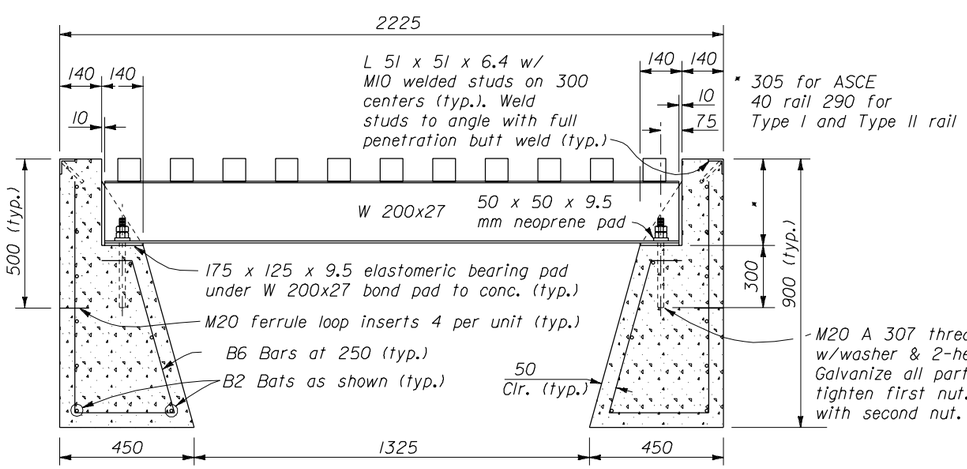

SECTION C-C

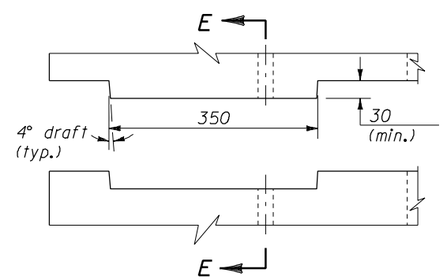

PLAN

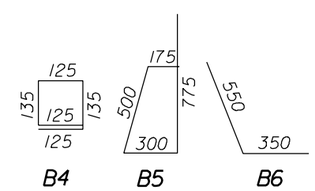

BAR BENDING DETAIL

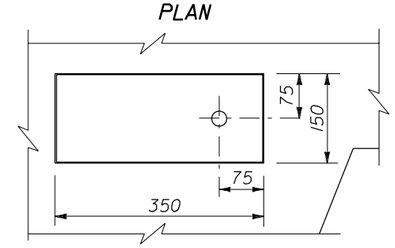

ELEVATION

KEY DETAIL

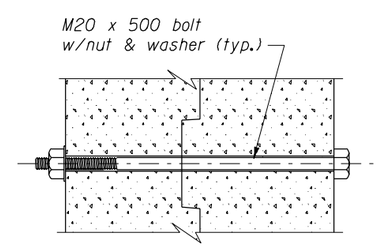

SECTION E-E

NO SCALE

NOTES:

1. Unless otherwise shown, dimensions are in millimeters.
2. See Standard M619-1 for reinforcing steel size and grade.
3. See Standard M619-2 for cattle guard wing details. Fabricate end units to accommodate selected cattle guard wing.
4. Minimum soil bearing 19 500 kg/m^2. Place units in fine aggregate bed 75 mm thick over hand leveled soil compacted to not less than 95 percent density.
5. Chamfer exposed concrete edges 20 mm unless otherwise shown. Give all concrete surfaces a Class 1 finish.
6. Approved alternate designs may be used.

PRECAST CATTLE GUARD

REINFORCING STEEL AND CONCRETE

UNIT	No. of BARS	BAR MARK	LENGTH	MASS kg	CONCRETE m3
1.6 m END	7	B3	2100	11.5	1.23
	10	B2	1850	14.5	
	8	B1	425	4.7	
	6	B4	650	3.1	
	18	B6	1750	14.1	
	6	B5	900	4.2	
1.6 m INTERIOR	8	B3	2100	13.2	1.00
	10	B2	1650	13.0	
	12	B4	650	6.1	
	18	B6	1750	24.7	
	8	B5	900	5.7	
2.4 m INTERIOR	8	B3	2100	13.2	1.32
	10	B2	2250	17.7	
	12	B4	650	6.1	
	20	B6	1750	27.5	
	8	B5	900	5.7	
2.4 m END	7	B3	2100	11.5	1.56
	10	B2	2450	19.2	
	8	B1	425	4.7	
	6	B4	650	3.1	
	20	B6	1750	27.5	
	6	B5	900	4.2	

U.S. DEPARTMENT OF TRANSPORTATION
FEDERAL HIGHWAY ADMINISTRATION
FEDERAL LANDS HIGHWAY

METRIC STANDARD

CATTLE GUARD PRECAST FOUNDATION

STANDARD APPROVED FOR USE --/----

REVISED: 11/97 07/98

STANDARD M619-03

02/27/2003 09:04:59 AM M:\Standard\METRIC\Mst16\903.dgn