REG	STATE	PROJECT	SHEET NO.

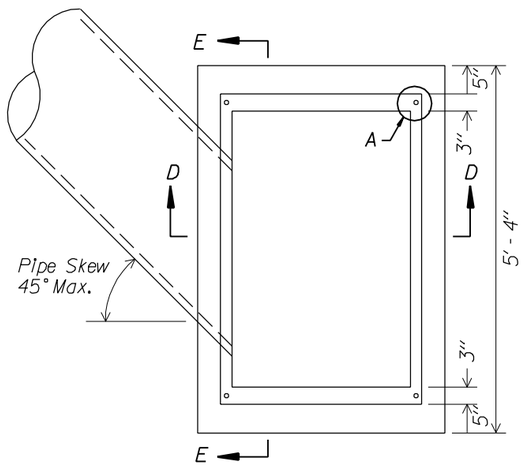

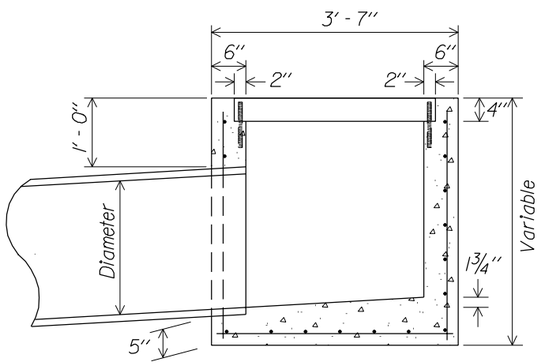

SECTION D-D

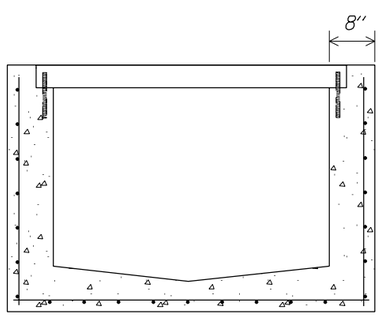

SECTION E-E

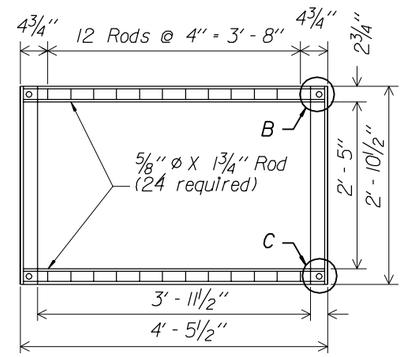

GRATE FRAME

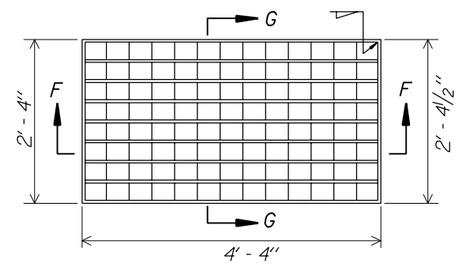

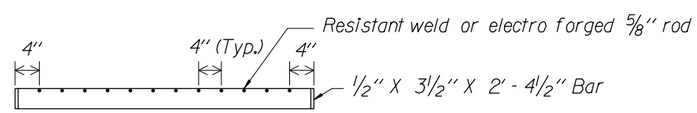

SECTION F-F

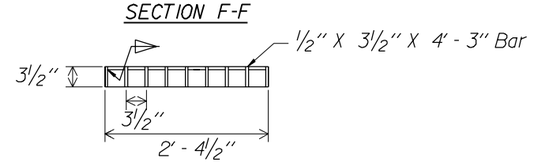

SECTION G-G

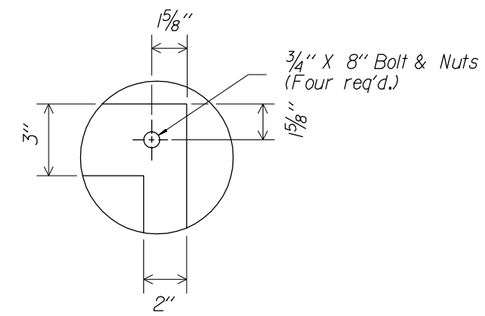

VIEW-A

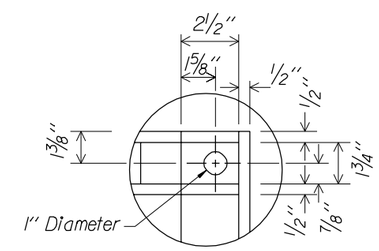

VIEW-B

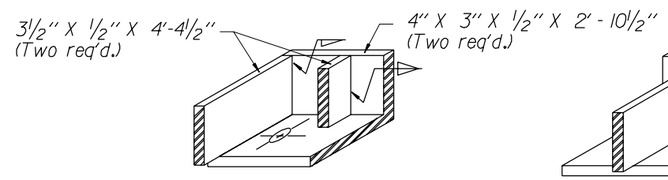

VIEW-B
(Oblique)

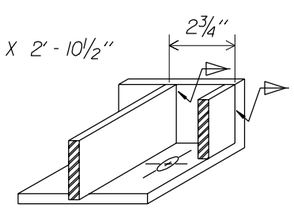

VIEW-C
(Oblique)

Notes:

1. All reinforcing bars shall be #5 placed 1½" minimum from face of concrete.
2. In floors, place bars on 6" centers each way. In walls, place horizontal bars on 6" centers and vertical bars on 12" centers.
3. All metal parts of frame and grate shall be hot dip galvanized after fabrication. Frame and grating shall be steel.

U.S. DEPARTMENT OF TRANSPORTATION
FEDERAL HIGHWAY ADMINISTRATION
EASTERN FEDERAL LANDS HIGHWAY DIVISION

DETAIL

INLET
TYPE 5B

DETAIL APPROVED FOR USE --/----

REVISED:

DETAIL
E604-4

02/26/2003 10:50:37 AM M:\Standard\English\dt604x04.dgn