REG	STATE	PROJECT	SHEET NO.

Note:

1. Place 3-inches, minimum aggregate bed course under all curb and gutter.

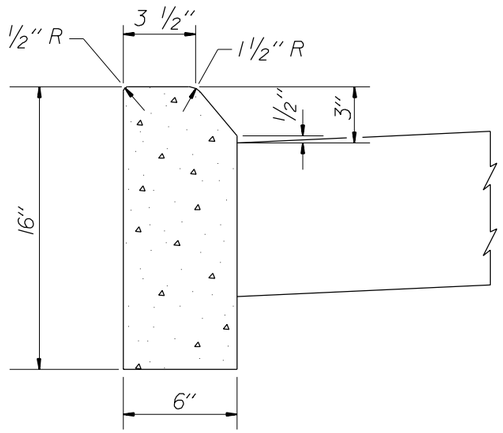

16-INCH DEPTH
(MOUNTABLE)

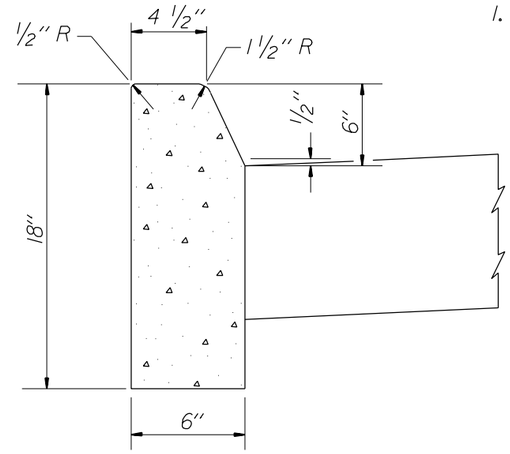

18-INCH DEPTH
(NON- MOUNTABLE)

PORTLAND CEMENT CONCRETE CURB

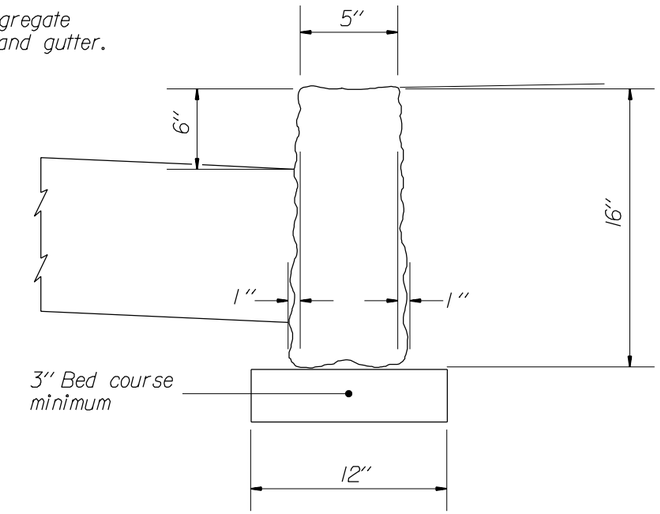

STONE CURB
16-INCH DEPTH
(NON-MOUNTABLE)

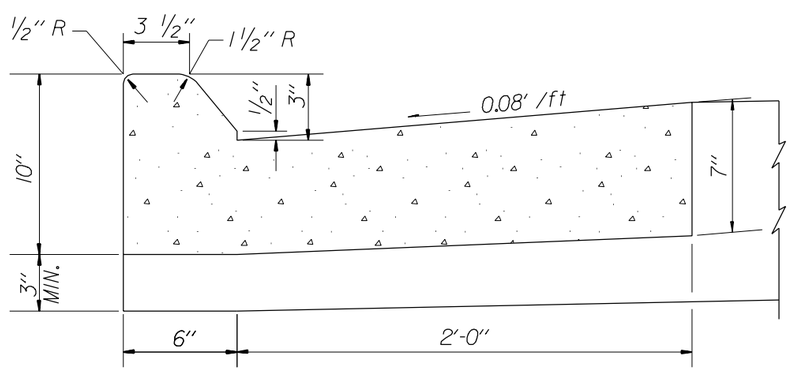

10-INCH DEPTH
(MOUNTABLE)

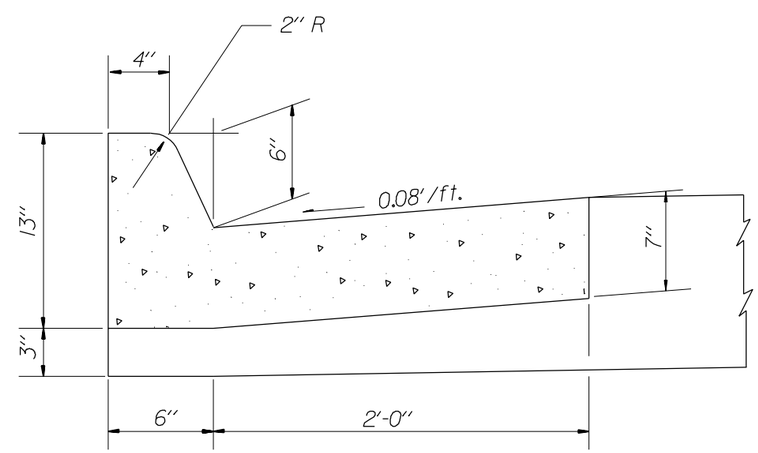

13-INCH DEPTH
(NON- MOUNTABLE)

PORTLAND CEMENT CONCRETE CURB AND GUTTER

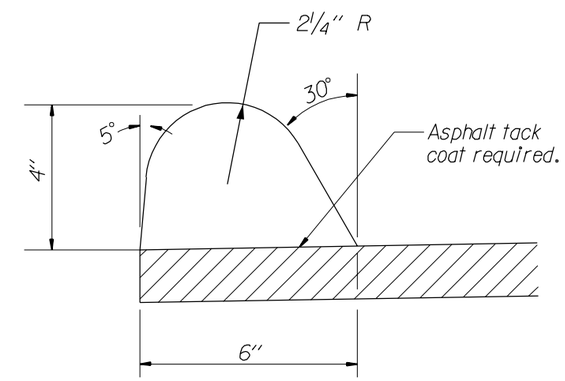

ASPHALT CONCRETE CURB
5-INCH DEPTH
(NON-MOUNTABLE)

Asphalt tack coat may be rapid curing liquid asphalt or emulsified asphalt.

NOT TO SCALE

U.S. DEPARTMENT OF TRANSPORTATION
FEDERAL HIGHWAY ADMINISTRATION
EASTERN FEDERAL LANDS HIGHWAY DIVISION

DETAIL

CURBS

DETAIL APPROVED FOR USE --/----

REVISED:

DETAIL
E609-1

02/26/2003 11:00:43 AM M:\Standard\English\dt609x01.dgn