REG	STATE	PROJECT	SHEET NO.

STEEL POST FOOTING DATA TABLE					
POST SIZE	NOMINAL SIZE (IN.)	STUB		FOOTING	
		PROJ.	LENGTH	DIA.	MINIMUM DEPTH
a	2 X 2	4"	2'	12"	3'
b	3 X 4	4"	2'	15"	3'
c	4 X 6	4"	2'	15"	3'

STEEL POSTS FOR GROUND MOUNTED SIGNS												
POST SIZE	NOMINAL SIZE (IN.)	BOLT SPECIFICATIONS	BASE CONNECTION DATA TABLE (Inches)									
			A	B	C	D	E	F	t_1	t_2	w	R
a	2 X 2	5/8" Ø X 2 1/2" HS 450 IN.- LBS.	6 1/2	4	5	1 3/4	3/4	1 1/8	5/8	3/16	3/16	11/16
b	3 X 4		8 1/2	4	7	1 3/4	3/4	1 1/8	5/8	3/16	1/4	11/16
c	4 X 6	5/8" Ø X 3" HS 450 IN - LB	10	5	8 1/2	2 1/2	3/4	1 1/4	3/4	1/4	5/16	11/16

FUSE PLATE DATA TABLE (Inches)												
POST SIZE	G	H	J	K	L	M	N	d_1	t_3	c_1	BOLT DIAM.	TORQUE FT.-LBS.
a	4	2 1/4	1 1/8	2	7/8	9/16	5/8	7/16	1/4	1/4	3/8	200
b	4	2 1/4	1 1/8	3	1 1/4	7/8	5/8	9/16	5/16	1/4	1/2	200
c	4 1/2	2 3/8	1 1/4	4	1 3/4	1 1/8	7/8	11/16	3/8	3/8	5/8	200

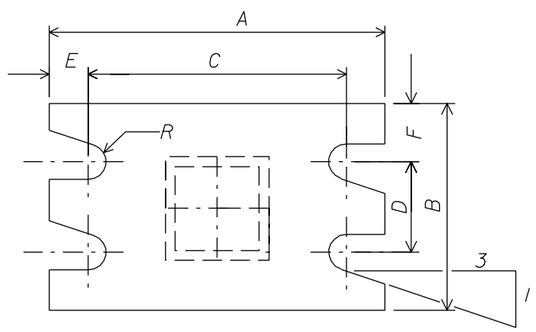

BREAKAWAY PLATE SECTION A-A

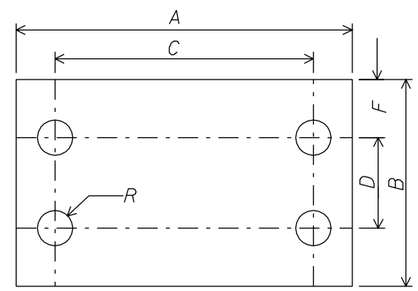

BOND BREAKING PLATE

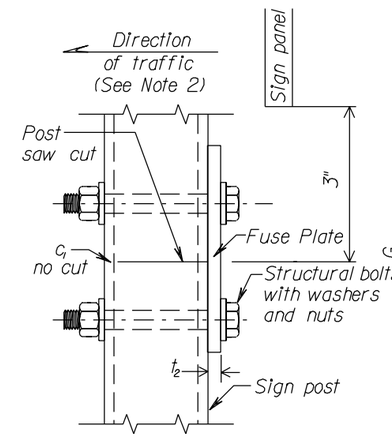

FUSE PLATE SIDE ELEVATION

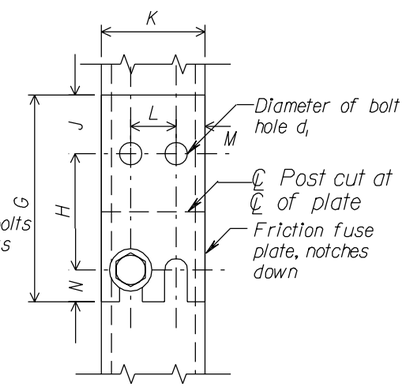

FUSE PLATE FRONT ELEVATION (See Note 4)

NOTES:

1. Breakaway design is not required for signs placed behind protective barriers.
2. Breakaway assembly to be installed in the direction of major traffic.
3. The multiple post breakaway detail to be used on single posts in medians where exposed to opposing lanes of traffic.
4. Fuse plates are to be used on multiple post installations only.
5. The breakaway plates, only are to be painted brown to match the final appearance of the weathering steel posts.

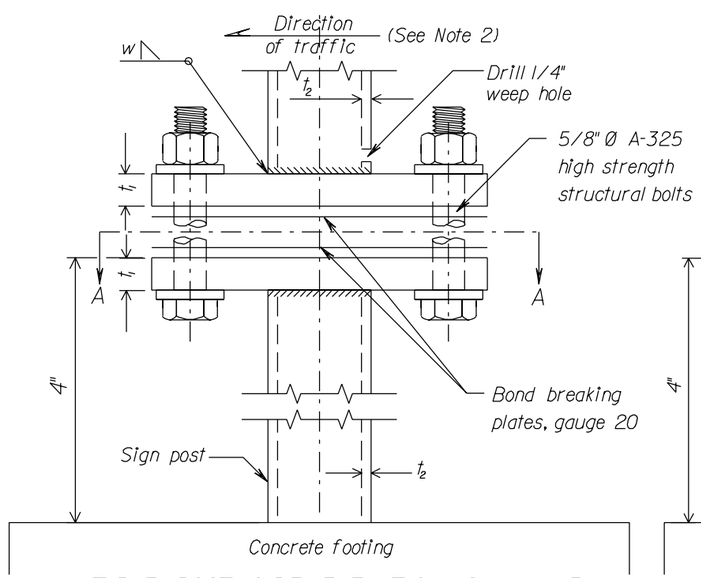

MULTIPLE POST SIDE ELEVATION (See Note 3)

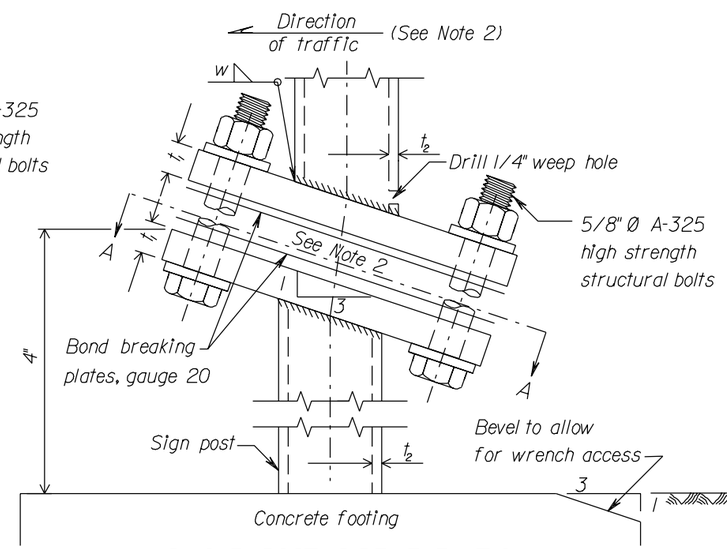

SINGLE POST SIDE ELEVATION

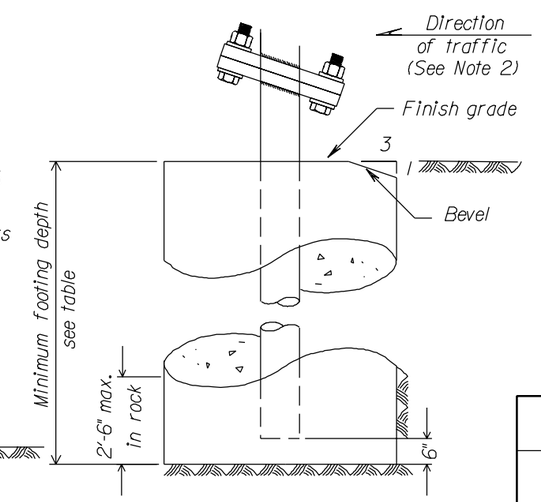

CONCRETE FOOTING DETAILS

U.S. DEPARTMENT OF TRANSPORTATION
FEDERAL HIGHWAY ADMINISTRATION
EASTERN FEDERAL LANDS HIGHWAY DIVISION

DETAIL

BREAKAWAY SIGN SUPPORT, WEATHERING STEEL

DETAIL APPROVED FOR USE --/----

REVISED:

DETAIL E633-2

02/26/2003 11:22:11 AM M:\Standard\English\dt633x02.dgn