| REG | STATE | PROJECT | SHEET NO. |
|---|---|---|---|
| | | | |

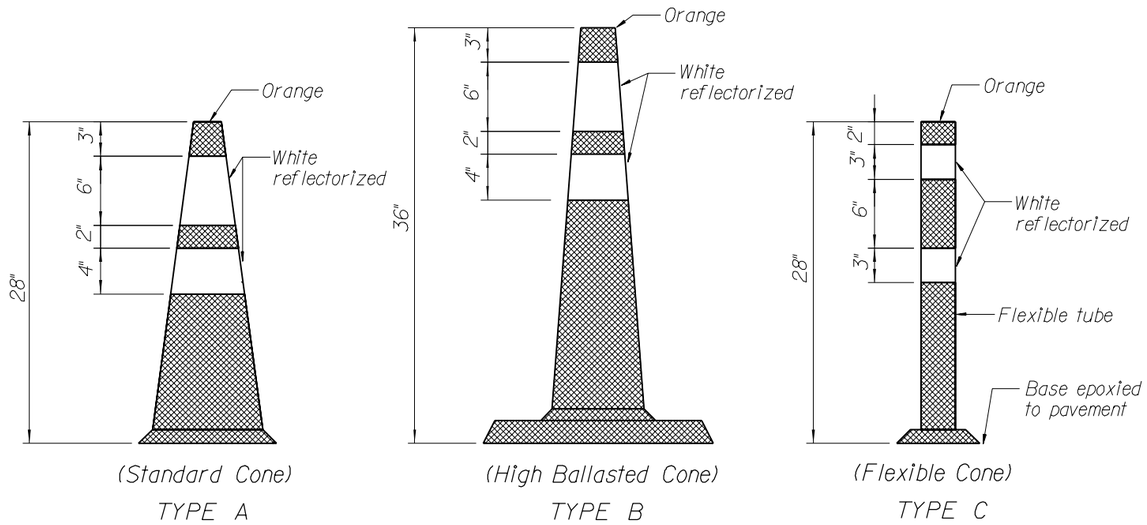


CONES

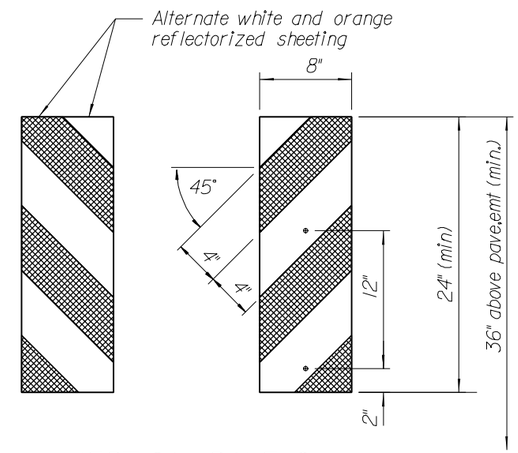


VERTICAL PANELS
(ORANGE AND WHITE)

Notes:

1. Reflectorize vertical panels with alternate orange and white stripes as shown.
2. Mount delineators 4 feet above the pavement surface.
3. Drums may be weighted with 20 pounds (maximum of sand, and contain no moisture.
4. Temporary raised pavement marker's color to match corresponding pavement striping, clear for white and amber for yellow.
5. Cones, type A may be ballasted with weighted rings.

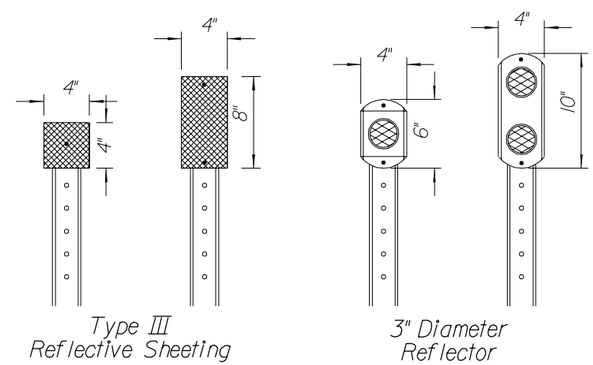


DELINEATORS

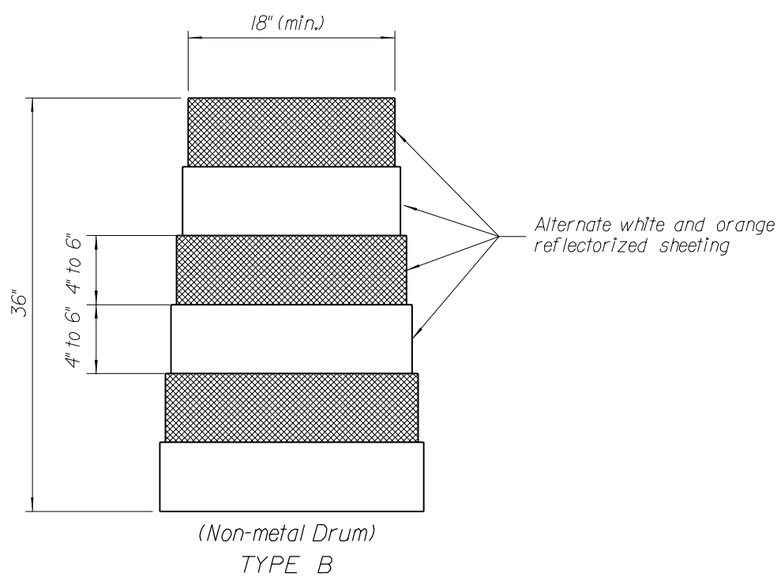


DRUM

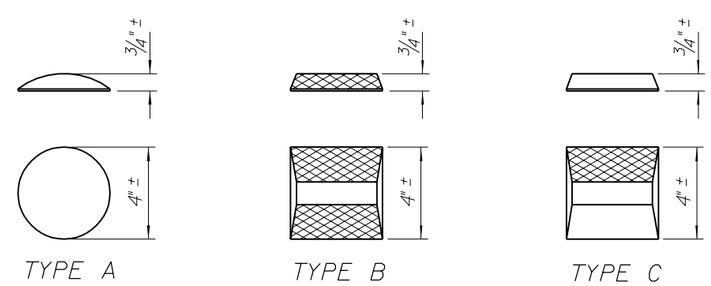


TEMPORARY RAISED PAVEMENT MARKERS

U.S. DEPARTMENT OF TRANSPORTATION
FEDERAL HIGHWAY ADMINISTRATION
EASTERN FEDERAL LANDS HIGHWAY DIVISION

DETAIL

CONSTRUCTION TRAFFIC CONTROL
CHANNELIZING DEVICES

DETAIL APPROVED FOR USE --/----

REVISED:

DETAIL
E635-3

02/26/2003 11:27:10 AM M:\Standard\English\d635x03.dgn