REG	STATE	PROJECT	SHEET NO.

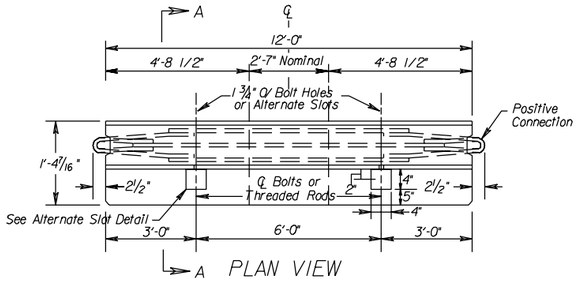

PLAN VIEW

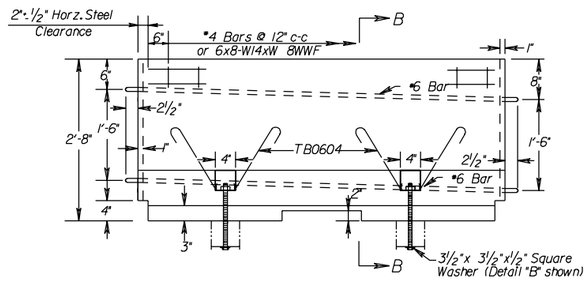

ELEVATION VIEW

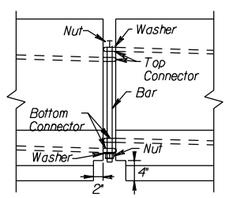

ELEVATION OF CONNECTION

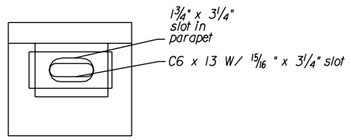

ALTERNATE SLOT DETAIL

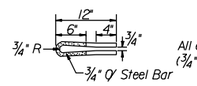

TOP CONNECTOR

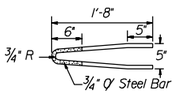

BOTTOM CONNECTOR

Galvanize After Forming
Note: Entire Connector May Be Galvanized.

REINFORCING STEEL SCHEDULE					
FOR ONE (1) SECTION					
Mark	No.	Size	Length	Pin Ø	Location
TB0401	8	4	11'-5"	——	Temp. Parapet
TB0502	12	5	4'-3"	2 1/2"	"
TB0503	12	5	2'-8"	2 1/2"	"
TB0604	4	6	4'-8"	4 1/2"	"

BENDING DIAGRAM

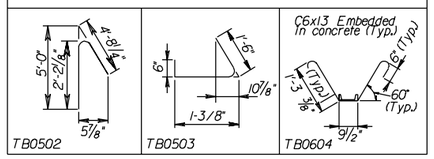

Dimensions in bending diagrams are out-to-out of bars, except as shown.
Pounds of Reinforcing Steel = 176
Reinforcing schedule based on 12'-0" unit length.

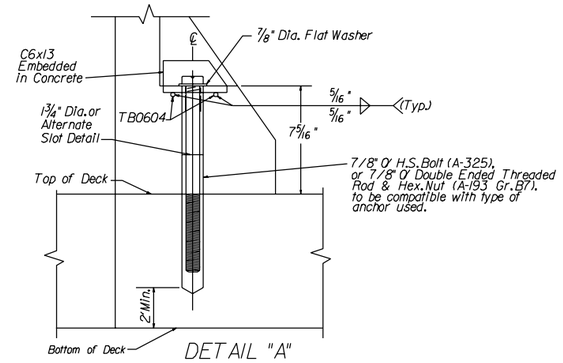

DETAIL "A"

NOTES:

1. Space barrier in accordance with Section 633.
2. Reflective surface to be facing oncoming traffic.
3. Conrete is to be minimum 4000 PSI and reinforcing steel is to be grade 60.
4. After removing barrier, cut 7/8" Ø bolt or threaded rod as low as practical below roadway surface and fill recess with epoxy bonding compound EP-4 (Detail "A") or remove 7/8" Ø bolts or threaded rods and fill holes with grout bonded with epoxy bonding compound EP-4 (Detail "B").
5. Test anchor system shown in Detail "A" to provide a minimum pullout of 32,000 lbs.
6. When barrier is located on vertical and/or horizontal curves, the opening at joints is not to exceed 1".

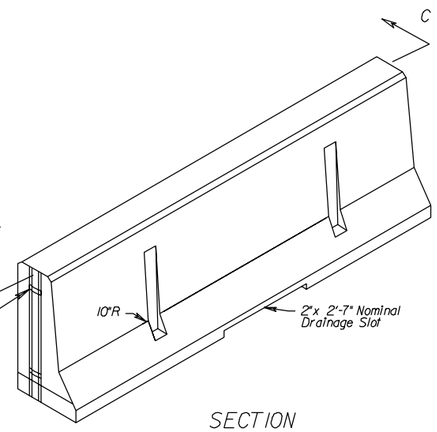

SECTION

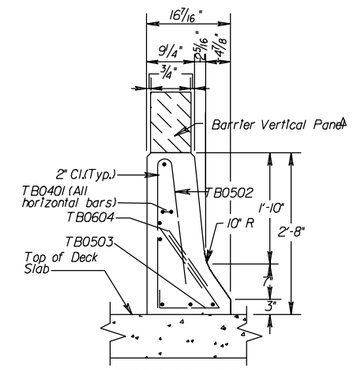

SECTION A-A

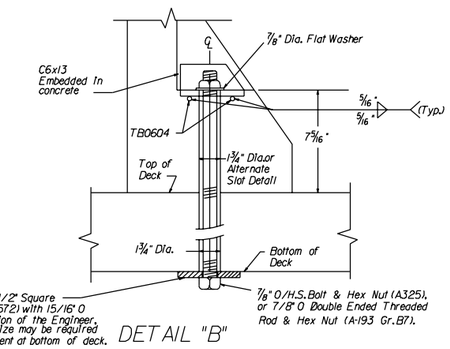

DETAIL "B"

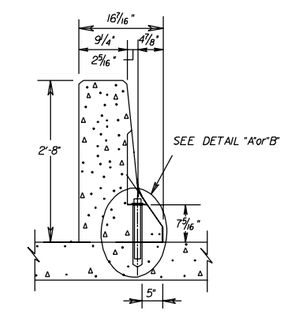

SECTION B-B
(ANCHOR BOLT)
Bolt down side adjacent to traffic.

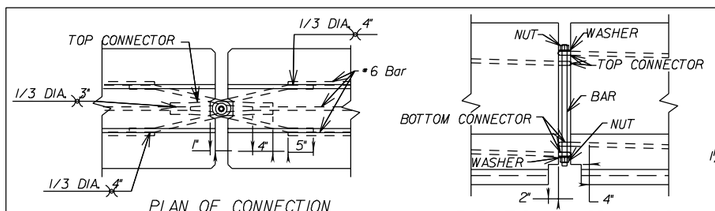

PLAN OF CONNECTION

ELEVATION OF CONNECTION

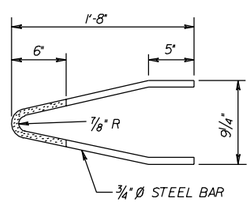

BOTTOM CONNECTOR
GALVANIZE AFTER FORMING

NOTE: ENTIRE CONNECTOR MAY BE GALVANIZED.

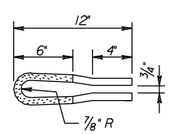

TOP CONNECTOR

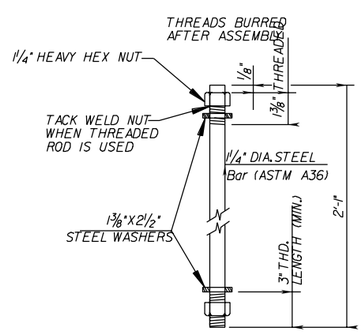

CONNECTOR PIN ASSEMBLY
GALVANIZE AFTER FABRICATION

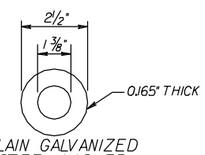

PLAIN GALVANIZED STEEL WASHER FOR 1 1/4" PIN

NOTES:

1. 4" MIN. OR VARIABLE TO COINCIDE WITH SUBGRADE COURSE.
2. REFLECTIVE SURFACE OF BARRIER DELINEATOR FACES ONCOMING TRAFFIC.
3. PIN AND CONNECTORS SHALL BE ASTM-A36. REINFORCING STEEL BARS SHALL BE ASTM A 615 GRADE 60. ONE CONNECTOR PIN ASSEMBLY WITH EACH BARRIER SECTION.

POSITIVE CONNECTION DETAILS

U.S. DEPARTMENT OF TRANSPORTATION
FEDERAL HIGHWAY ADMINISTRATION
EASTERN FEDERAL LANDS HIGHWAY DIVISION

DETAIL

CONSTRUCTION TRAFFIC CONTROL
TEMPORARY CONCRETE BARRIER
SINGLE FACE

DETAIL APPROVED FOR USE --/----

REVISED: 4/29/02

DETAIL
E635-13

ADAPTED FROM: VIRGINIA DEPARTMENT OF TRANSPORTATION SPECIAL DETAIL 1276-A

02/26/2003 11:34:27 AM M:\Standard\English\dt635v13.dgn