REG	STATE	PROJECT	SHEET NO.

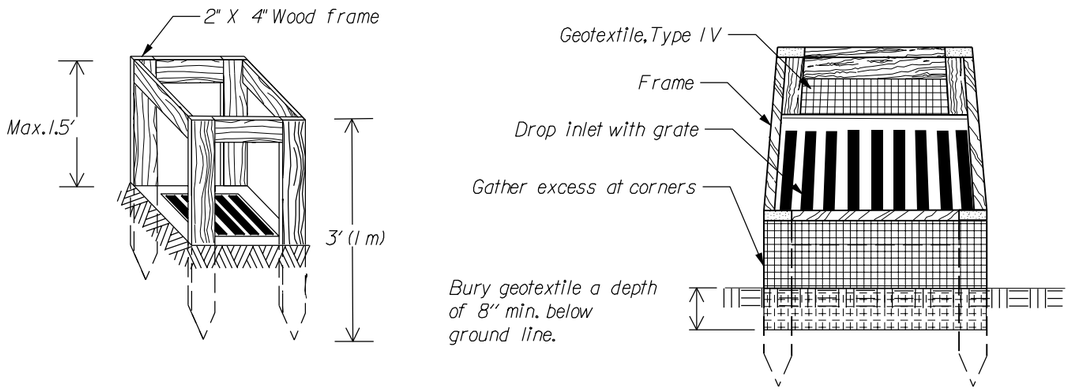

SILT FENCE DROP INLET PROTECTION (TYPE A)

Note: Use Type A inlet protection in sump locations only.

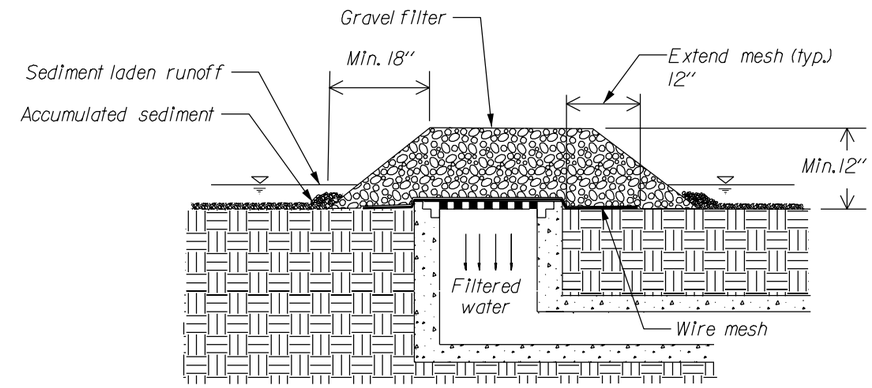

GRAVEL AND WIRE MESH DROP INLET PROTECTION (TYPE B)

Note: Use Type B inlet protection only in sump locations where heavy concentrated flows are not expected. Do not use where ponding around the structure might cause inconvenience or damage.

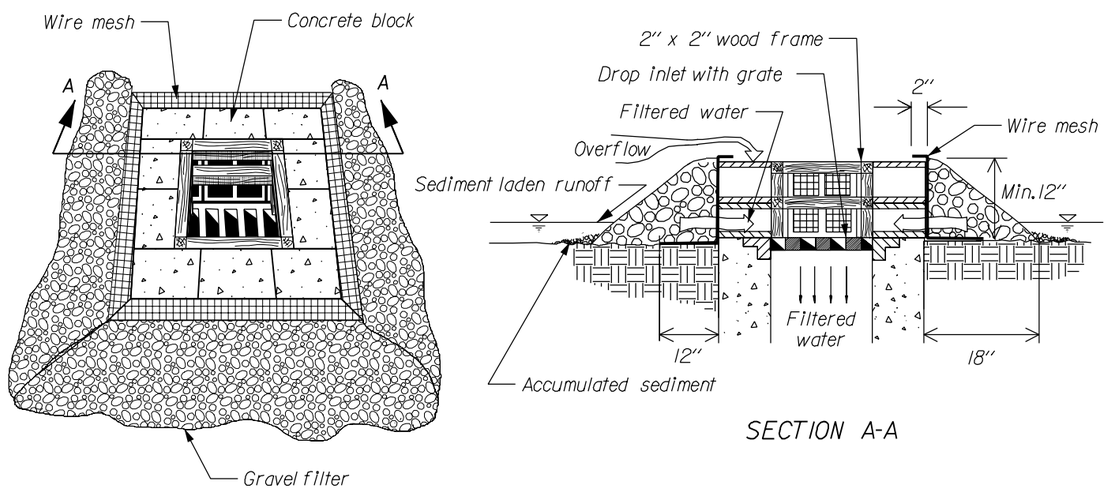

SECTION A-A

BLOCK AND GRAVEL DROP INLET PROTECTION (TYPE C)

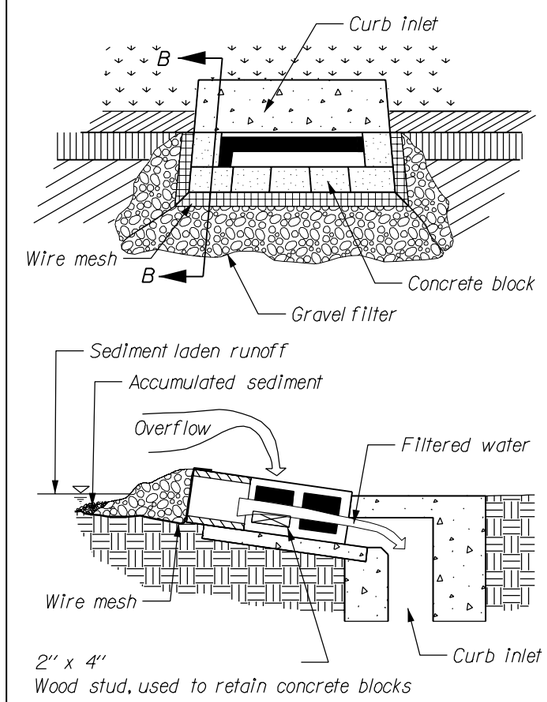

SECTION B-B

CURB INLET PROTECTION, BLOCK AND GRAVEL (TYPE D)

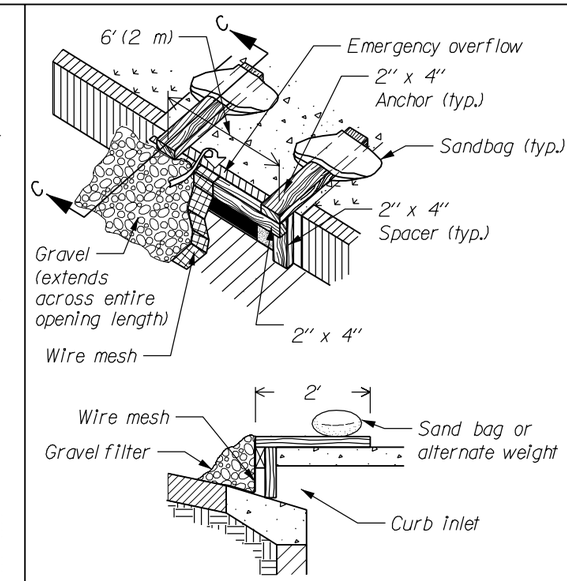

SECTION C-C

CURB INLET PROTECTION, WOODEN WEIR (TYPE E)

General Notes:

1. For gravel filters use 2" - 3" diameter coarse aggregate.
2. Use wire mesh with ½" x ½" openings.

(not to scale)

U.S. DEPARTMENT OF TRANSPORTATION
FEDERAL HIGHWAY ADMINISTRATION
FEDERAL LANDS HIGHWAY

STANDARD

TEMPORARY INLET PROTECTION

STANDARD APPROVED FOR USE --/----

REVISED:

STANDARD 157-2

02/26/2003 11:38:20 AM M:\Standard\English\std157x02.dgn