REG	STATE	PROJECT	SHEET NO.

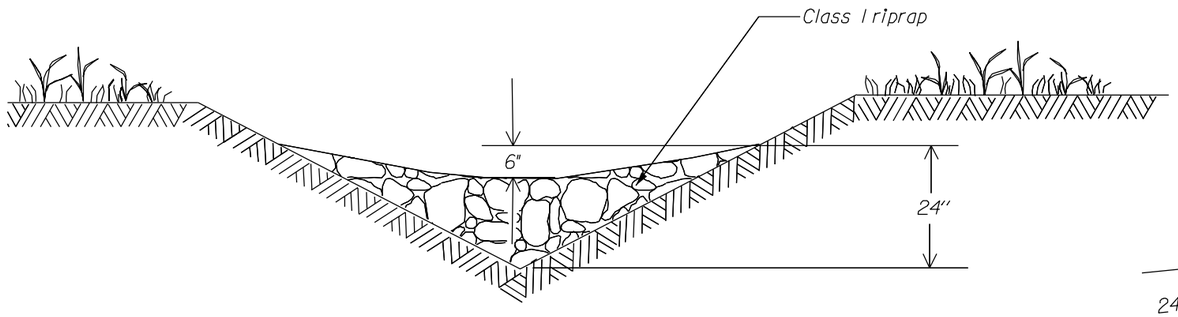

CROSS SECTION
V DITCH

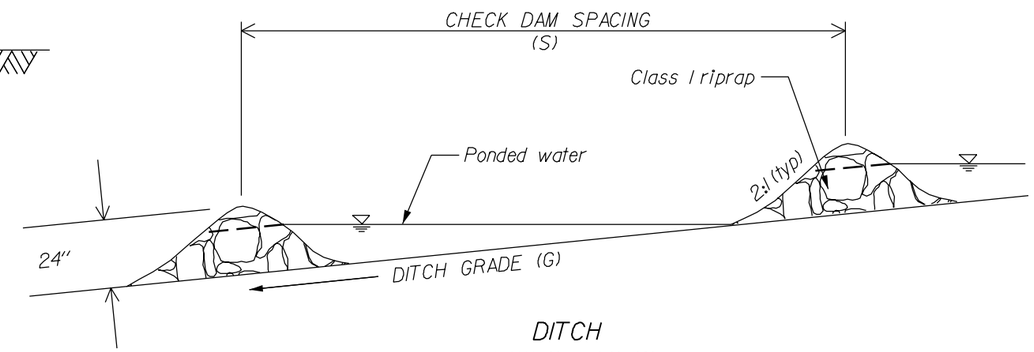

DITCH
PROFILE VIEW

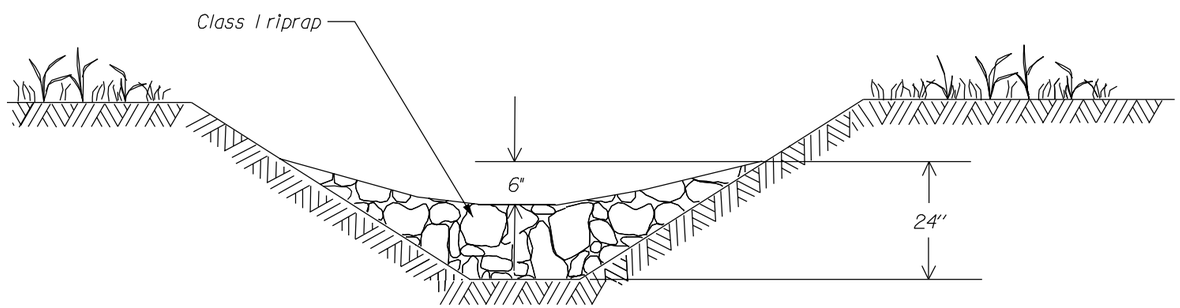

CROSS SECTION
TRAPEZOIDAL DITCH

DITCH GRADE (G) *	CHECK DAM SPACING(S)
2%	75 ft
3%	50 ft
4%	40 ft
5%	30 ft
6%	25 ft

* do not use Check Dams below 2% or above 6% ditch grades

(not to scale)

U.S. DEPARTMENT OF TRANSPORTATION
FEDERAL HIGHWAY ADMINISTRATION
FEDERAL LANDS HIGHWAY

STANDARD

CHECK DAM

STANDARD APPROVED FOR USE --/----

REVISED:

STANDARD
157-6

02/26/2003 11:39:48 AM M:\Standard\English\st157x06.dgn