REG	STATE	PROJECT	SHEET NO.

HEADWALL FOR DOUBLE PIPE CULVERT

DIMENSIONS, REINFORCING STEEL AND CONCRETE TABLE OF QUANTITIES

D	H	SQUARE HEADWALL					15° SKEW					30° SKEW					45° SKEW				
		A	B	L	CONC.	STEEL	A	B	L	CONC.	STEEL	A	B	L	CONC.	STEEL	A	B	L	CONC.	STEEL
in	ft	ft	ft	ft	ft^3	lb	ft	ft	ft	ft^3	lb	ft	ft	ft	ft^3	lb	ft	ft	ft	ft^3	lb
47	4.9	3.9	5.9	13.8	54.7	189.6	4.3	6.2	14.8	56.5	205.0	4.6	6.9	16.1	63.2	216.0	5.6	8.5	19.7	77.3	271.2
53	5.2	4.6	6.9	16.1	65.7	222.7	4.9	6.9	16.7	68.9	227.1	5.2	7.9	18.4	77.0	253.5	6.6	9.8	23.0	94.3	319.7
59	5.4	5.2	7.5	18.0	77.3	253.5	5.6	7.9	19.0	80.2	264.6	6.2	8.5	210	89.3	297.6	7.5	10.5	25.6	109.5	363.8
65	5.7	5.9	8.2	20.0	89.0	313.1	6.2	8.5	21.0	91.8	321.9	6.9	9.5	23.3	102.4	366.0	8.5	11.5	28.5	125.7	460.8
71	5.9	6.6	8.9	22.0	100.6	343.9	6.9	9.2	23.0	104.2	363.8	7.5	10.5	25.6	116.5	412.3	9.2	12.8	31.2	142.7	511.5
77	6.2	7.2	9.8	25.3	121.5	405.6	7.2	10.2	24.6	125.7	381.4	8.2	11.2	27.6	140.2	429.9	10.2	13.8	34.1	171.6	535.7
83	6.4	7.9	10.5	26.2	128.5	445.3	7.9	11.2	26.9	133.1	449.7	8.9	11.8	29.5	148.7	493.8	11.2	14.8	37.1	181.9	628.3
89	6.6	8.5	11.2	28.2	142.3	478.4	8.5	11.8	28.9	147.3	487.2	9.8	12.8	32.5	164.6	551.1	11.8	16.1	39.7	201.3	679.0
95	6.9	8.9	11.8	29.5	152.2	509.3	9.2	12.1	30.5	157.5	522.5	10.5	13.8	34.8	175.9	599.6	12.8	17.1	42.7	215.4	738.5
100	7.1	9.5	12.5	31.5	167.0	571.0	9.8	13.1	32.8	173.0	606.3	11.2	14.4	36.7	193.2	683.4	13.8	17.7	45.3	236.3	831.1
106	7.4	10.2	13.1	33.5	182.6	621.7	10.5	13.5	34.4	188.9	643.7	11.8	15.1	38.7	210.8	727.5	14.4	18.4	47.2	258.1	881.8
112	7.6	10.8	13.5	35.1	196.0	652.6	11.2	14.1	36.4	203.1	676.8	12.5	15.4	40.4	226.4	751.8	15.4	19.4	50.2	277.2	943.6
118	7.9	11.5	14.1	37.1	212.6	698.9	11.8	14.4	38.1	220.0	709.9	13.1	16.1	42.3	245.4	787.0	16.4	19.7	52.5	304.8	981.0
124	8.1	12.1	14.4	38.7	226.7	769.4	12.5	15.1	40.0	234.8	795.9	14.1	16.7	44.9	262.0	895.1	17.1	20.3	54.5	320.7	1075.8
130	8.4	12.8	15.1	40.7	244.4	815.7	13.1	15.4	41.7	252.9	837.7	14.8	17.4	46.9	282.2	945.8	18.0	21.3	57.4	345.7	1161.8
136	8.6	13.5	15.4	42.3	259.6	851.0	13.8	16.1	43.6	268.4	879.6	15.4	17.7	48.6	299.8	985.4	19.0	22.0	60.0	366.9	1214.7
142	8.9	14.1	16.1	44.3	278.3	936.9	14.4	16.4	45.3	288.2	961.2	16.1	18.4	50.5	321.4	1073.6	20.0	22.3	62.3	393.8	1336.0
148	9.1	14.8	16.4	45.9	294.5	983.2	15.1	17.1	47.2	305.1	1011.9	16.7	19.0	52.5	340.4	1135.4	20.7	23.3	64.6	416.7	1410.9
154	9.4	15.1	17.1	47.2	308.3	1020.7	15.7	17.4	48.9	319.2	1053.8	17.7	19.7	55.1	356.0	1199.3	21.7	23.9	67.3	435.8	1463.8
160	9.6	15.7	17.4	48.9	325.2	1104.5	16.4	18.0	50.9	336.5	1153.0	18.4	20.3	57.1	375.7	1300.7	22.6	24.6	69.9	460.1	1598.3
166	9.8	16.4	18.0	50.9	346.1	1168.4	17.1	18.4	52.5	358.1	1203.7	19.0	20.7	58.7	399.4	1349.2	23.3	25.6	722	489.1	1675.5
172	10.1	17.1	18.4	52.5	363.7	1219.1	17.7	19.0	54.5	376.5	1258.8	19.7	21.3	60.7	420.2	1415.3	24.3	26.2	74.8	515.6	1761.5
178	10.3	17.7	19.0	54.5	385.3	1269.8	18.4	19.7	56.4	398.7	1318.3	20.3	22.0	62.7	445.0	1457.2	25.3	26.9	77.4	544.9	1812.2

HEADWALL FOR SINGLE PIPE CULVERT

DIMENSIONS, REINFORCING STEEL AND CONCRETE TABLE OF QUANTITIES

D	H	SQUARE HEADWALL			15° SKEW			30° SKEW			45° SKEW		
		L	CONC.	STEEL	L	CONC.	STEEL	L	CONC.	STEEL	L	CONC.	STEEL
in	ft	ft	ft^3	lb	ft	ft^3	lb	ft	ft^3	lb	ft	ft^3	lb
47	4.9	7.9	32.1	108.0	8.2	33.2	116.8	9.2	37.1	130.1	11.2	45.2	154.3
53	5.2	9.2	39.2	130.1	9.8	40.6	141.1	10.8	45.2	152.1	13.1	55.4	183.0
59	5.4	10.5	46.6	156.5	10.8	48.4	156.5	12.1	53.7	176.4	15.1	65.7	213.8
65	5.7	11.8	54.4	200.6	12.1	56.5	196.2	13.5	62.9	213.8	16.7	77.0	264.6
71	5.9	13.1	62.9	213.8	13.5	65.0	218.3	15.1	72.4	246.9	18.4	88.6	297.6
77	6.2	14.1	69.6	229.3	14.8	72.0	240.3	16.4	80.5	266.8	20.3	98.5	330.7
83	6.4	15.4	78.8	273.4	16.1	91.6	277.8	18.0	91.1	317.5	22.0	111.2	385.8
89	6.6	16.7	87.2	297.6	17.4	90.4	308.6	19.4	101.0	341.7	23.6	123.6	423.3
95	6.9	18.0	98.5	330.7	18.7	101.7	341.7	20.7	113.7	374.8	25.6	139.1	465.2
100	7.1	19.4	108.8	374.8	20.0	112.7	388.0	22.3	125.7	436.5	27.2	154.0	531.3
106	7.4	20.3	117.6	407.8	21.3	121.5	425.5	23.6	135.6	471.8	28.9	166.0	573.2
112	7.6	21.7	132.4	429.9	22.6	137.0	447.5	25.3	152.9	509.3	30.8	187.2	612.9
118	7.9	23.0	140.6	463.0	23.9	145.5	480.6	26.6	162.4	533.5	32.5	198.8	645.9
124	8.1	24.3	154.7	515.9	25.3	160.0	542.3	27.9	178.7	597.4	34.1	218.6	723.1
130	8.4	25.6	165.3	555.6	26.6	171.3	573.2	29.5	191.1	643.7	36.1	233.8	784.8
136	8.6	26.9	178.3	595.2	27.9	184.7	612.9	30.8	206.2	670.2	37.7	252.1	828.9
142	8.9	27.9	189.3	645.9	28.9	196.0	665.8	32.5	218.6	749.6	39.7	267.7	919.3
148	9.1	29.2	203.1	679.0	30.2	210.1	709.9	33.8	234.5	793.7	41.3	287.1	972.2
154	9.4	30.5	217.5	723.1	31.5	225.3	740.7	35.1	251.4	833.3	43.3	307.6	1029.5
160	9.6	31.8	232.4	795.9	32.8	240.5	815.7	36.7	268.4	921.5	44.9	328.8	1124.3
166	9.8	33.1	247.6	833.3	34.1	256.4	853.2	38.1	286.0	959.0	46.6	350.3	1181.7
172	10.1	34.1	260.3	864.2	35.4	269.1	901.7	39.4	300.5	1009.7	48.6	368.0	1247.8
178	10.3	35.4	276.2	908.3	36.7	286.0	945.8	41.0	318.9	1058.2	50.2	390.6	1291.9

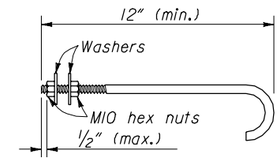

MIO HOOK BOLT DETAILS

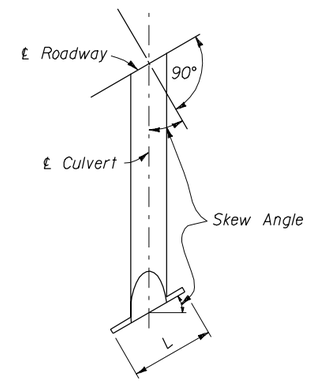

TYPICAL HALF PLAN

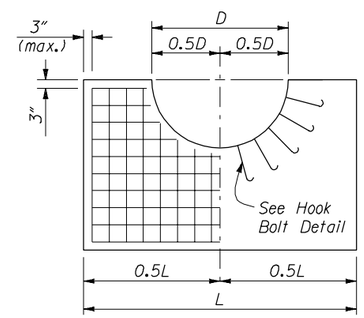

SINGLE PIPE CULVERT

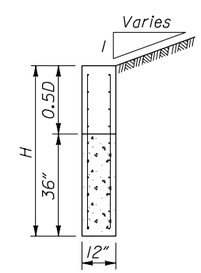

SECTION A-A

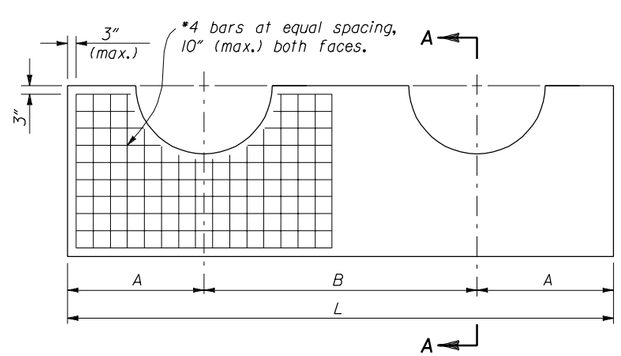

DOUBLE PIPE CULVERT HEADWALLS

NOTES:

1. Concrete conforms to Section 601. Pour concrete monolithically. Chamfer all exposed edges 3/4" and finish all exposed surfaces with a Class I ordinary finish.
2. Clearance for reinforcing steel is 2" unless otherwise noted.
3. Headwall dimension "H" may be reduced in solid rock provided the wall is keyed into the rock at least 12". Excavate and backfill according to Section 209.
4. Set hook bolts on nominal 18" centers around pipe perimeter at center of headwall. Hook bolts conform to ASTM A307. Galvanize according to ASTM A153.
5. For installations with more than two pipe culverts, increase the dimension "L" and all quantities shown for double pipe installation by adding a length equal to dimension "B" and the incremental change in quantities for each additional pipe culvert.
6. For skews other than those shown, multiply quantities and dimensions "A", "B" & "L" for square headwalls by secant of the skew angle.
7. Final quantities will be determined by using the tables on this standard.
8. Do not order materials until the length, skew angle, and slope bevel in the field have been approved.

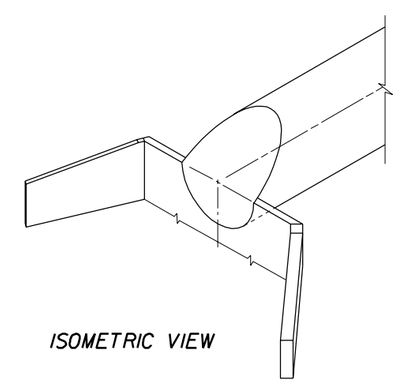

ISOMETRIC VIEW

NO SCALE

U.S. DEPARTMENT OF TRANSPORTATION
FEDERAL HIGHWAY ADMINISTRATION
FEDERAL LANDS HIGHWAY

STANDARD

CONCRETE HEADWALLS

STANDARD APPROVED FOR USE --/----

REVISED:

STANDARD 601-1

02/26/2003 11:44:12 AM M:\Standard\English\st601x01.dgn