REG	STATE	PROJECT	SHEET NO.

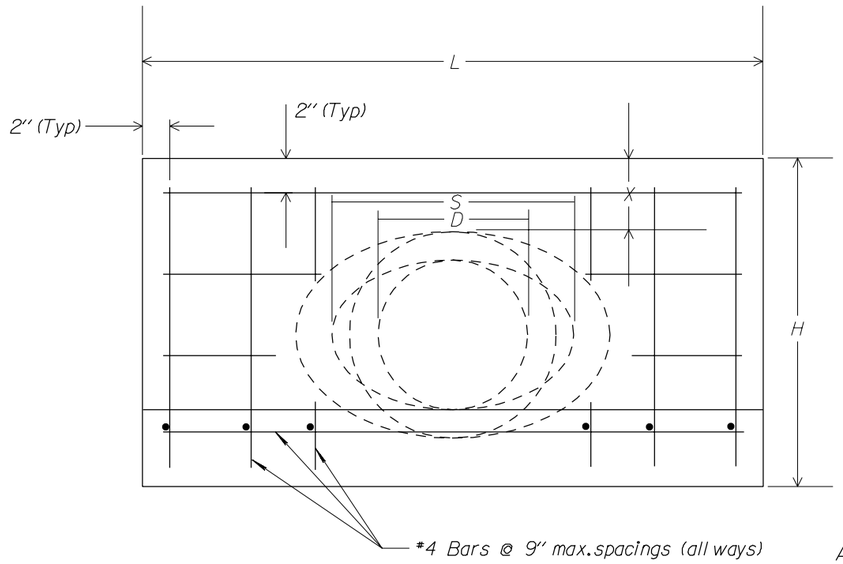

FRONT ELEVATION

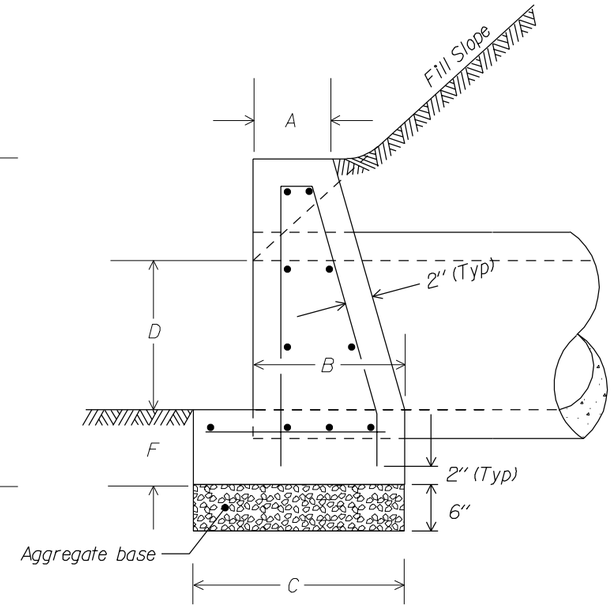

SIDE ELEVATION

Notes:

1. All headwalls are oriented parallel to the roadway centerline unless otherwise indicated on the plans or by the CO.
2. When pipes are on a skew, adapt and lengthen headwalls as directed.
3. Chamfer all exposed corners not rounded to ¾".
4. Quantities shown are for one headwall with pipe at right angles.
5. Provide reinforcing bars 0.9L or 0.9L' long.

HEADWALL FOR CIRCULAR PIPE

	DIAMETER OF PIPE CULVERT					
	6"	15"	18"	21" or 24"	27" or 30"	33" or 36"
A	0'-6"	0'-8"	0'-9"	0'-11"	1'-0"	1'-0"
B	0'-9"	1'-1"	1'-3"	1'-6"	1'-9"	2'-0"
C	1'-2"	1'-7"	1'-9"	2'-2"	2'-6"	2'-9"
D	1'-0"	1'-3"	1'-6"	2'-0"	2'-6"	3'-0"
F	0'-6"	0'-8"	0'-8"	0'-9"	0'-9"	0'-9"
H	2'-0"	2'-11"	3'-2"	3'-9"	4'-3"	4'-9"
L	3'-8"	5'-0"	6'-0"	8'-0"	10'-0"	12'-0"
	CU. YDS. CONCRETE					
Conc. Pipe	0.241	0.492	0.697	1.319	2.067	2.947
C.M. Pipe	0.257	0.521	0.739	1.398	2.198	3.145

HEADWALL FOR ELLIPTICAL PIPE

	SIZE OF ELLIPTICAL PIPE CULVERT (SPAN X RISE)									
	23" x 14"	30" x 19"	34" x 22"	38" x 24"	42" x 27"	45" x 29"	49" x 32"	53" x 34"	60" x 38"	68" x 43"
A	0'-8"	0'-9"	0'-10"	0'-11"	0'-11"	1'-0"	1'-0"	1'-0"	1'-0"	1'-0"
B	1'-2"	1'-5"	1'-6"	1'-8"	1'-9"	1'-10"	1'-11"	1'-11"	1'-11"	2'-0"
C	1'-8"	1'-11"	2'-1"	2'-4"	2'-5"	2'-7"	2'-8"	2'-9"	3'-3"	3'-6"
D	1'-2"	1'-7"	1'-10"	2'-0"	2'-3"	2'-5"	2'-8"	2'-10"	3'-2"	3'-7"
F	0'-8"	0'-8"	0'-9"	0'-9"	0'-9"	0'-9"	0'-9"	0'-9"	0'-9"	0'-9"
H	2'-10"	3'-3"	3'-7"	3'-9"	4'-0"	4'-2"	4'-5"	4'-7"	4'-11"	5'-4"
L	5'-5"	7'-2"	8'-6"	9'-2"	10'-2"	10'-11"	12'-1"	12'-11"	13'-0"	13'-0"
S	1'-11"	2'-6"	2'-10"	3'-2"	3'-6"	3'-9"	4'-1"	4'-5"	5'-0"	5'-8"
	CU. YDS. CONCRETE									
Conc. Pipe	0.502	0.855	1.236	1.500	1.811	2.101	2.512	2.801	2.969	2.904

U.S. DEPARTMENT OF TRANSPORTATION
FEDERAL HIGHWAY ADMINISTRATION
FEDERAL LANDS HIGHWAY

STANDARD

CONCRETE HEADWALL FOR 18" TO 36" PIPE CULVERT

STANDARD APPROVED FOR USE --/----

REVISED:

STANDARD 601-4

02/26/2003 11:45:13 AM M:\Standard\English\std601\std04.dgn