REG	STATE	PROJECT	SHEET NO.

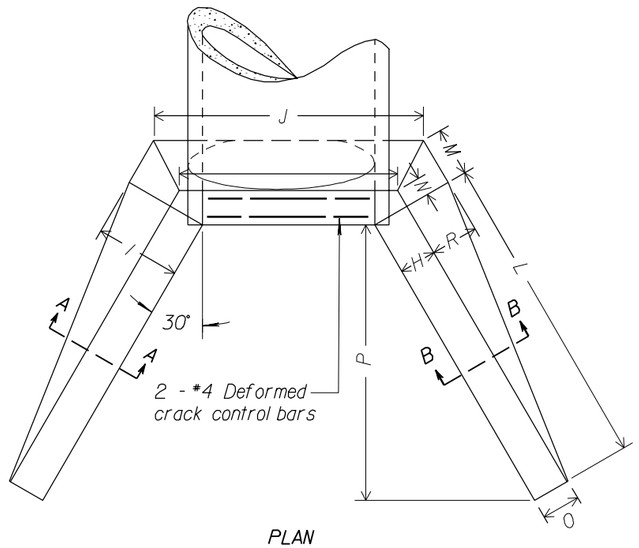

PLAN

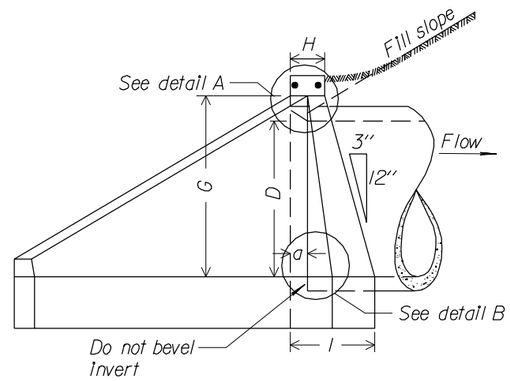

SIDE ELEVATION

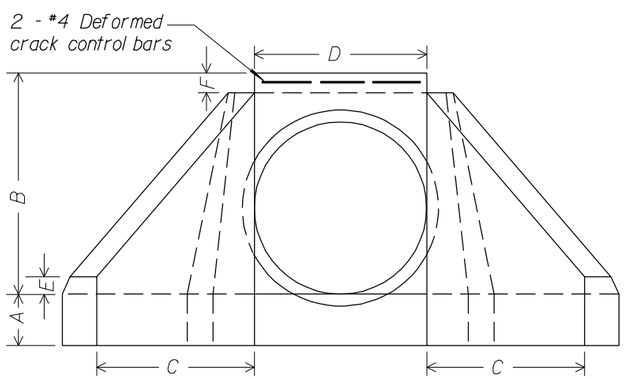

END ELEVATION

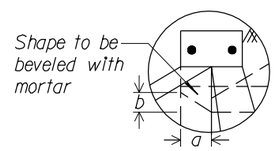

DETAIL A

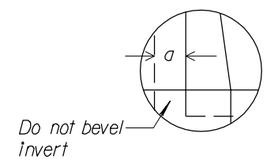

DETAIL B

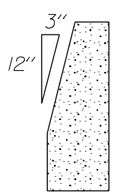

SECTION A-A

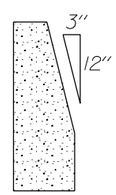

SECTION B-B

Notes:

1. This detail to be used for normal crossings and skews up to 15°.
2. On shallow fill, where headwall is 2' or less below shoulder line construct the headwall parallel to line and grade of the shoulder.
3. Do not allow top of wingwall to project above fill slope, ditch slope, or shoulder.
4. Chamfer all exposed corners 3/4".
5. Bevel required at inlet only.
6. Concrete quantities as shown will be used as the basis for final payment for wingwalls constructed in accordance with this detail.

DIMENSIONS AND QUANTITIES
PER WINGWALL

		D (Diameter of Pipe Culvert)								
		42"	48"	54"	60"	66"	72"	78"	84"	
For 1 1/2:1 Fill Slope	A	1'-6"	1'-6"	1'-6"	1'-6"	1'-6"	1'-6"	1'-6"	1'-6"	A
	B	4'-9 1/2"	5'-4"	5'-10 1/2"	6'-5"	6'-11 1/2"	7'-6"	8'-0 1/2"	8'-7"	B
	C	3'-3 3/4"	3'-9"	4'-2 1/4"	4'-7"	5'-0 5/8"	5'-5 3/4"	5'-11"	6'-4 1/4"	C
	D	3'-6"	4'-0"	4'-6"	5'-0"	5'-6"	6'-0"	6'-6"	7'-0"	D
	E	0'-6"	0'-6"	0'-6"	0'-6"	0'-6"	0'-6"	0'-6"	0'-6"	E
	F	0'-5 1/2"	0'-6"	0'-6 1/2"	0'-7"	0'-7 1/2"	0'-8"	0'-8 1/2"	0'-9"	F
	G	4'-4"	4'-10"	5'-4"	5'-10"	6'-4"	6'-10"	7'-4"	7'-10"	G
	H	0'-10"	0'-10"	0'-11"	1'-0"	1'-1"	1'-2"	1'-3"	1'-4"	H
	I	1'-11"	2'-0 1/2"	2'-3"	2'-5 1/2"	2'-8"	2'-10 1/2"	3'-1"	3'-3 1/2"	I
	J	5'-8 1/2"	6'-4 1/4"	7'-1 1/4"	7'-10"	8'-7"	9'-4"	10-0 3/4"	10'-9 5/8"	J
	K	4'-5 1/2"	4'-11 1/2"	5'-6 3/4"	6'-1 7/8"	6'-9"	7'-4 1/8"	7'-11 1/4"	8'-6 1/2"	K
	L	6'-7 5/8"	7'-6"	8'-4 1/2"	9'-2 7/8"	10'-1 1/4"	10'-11 5/8"	11'-10"	12'-8 3/8"	L
	M	1'-1 1/4"	1'-2 1/8"	1'-3 5/8"	1'-5"	1'-6 1/2"	1'-8"	1'-9 3/8"	1'-10 3/4"	M
	N	0'-5 3/4"	0'-5 3/4"	0'-6 3/8"	0'-6 7/8"	0'-7 1/2"	0'-8 1/8"	0'-8 5/8"	0'-9 1/4"	N
	O	0'-11 1/2"	0'-11 1/2"	1'-0 1/2"	1'-1 1/2"	1'-2 1/2"	1'-3 1/2"	1'-4 1/2"	1'-5 1/2"	O
	P	5'-9"	6'-6"	7'-3"	8'-0"	8'-9"	9'-6"	10'-3"	11'-0"	P
	R	1'-1"	1'-2 1/2"	1'-4"	1'-5 1/2"	1'-7"	1'-8 1/2"	1'-10"	1'-11 1/2"	R
Cu. Yds. Conc.	Conc.	3.558	4.373	5.635	7.089	8.776	10.702	12.861	15.303	
	CMP	3.791	4.680	6.054	7.642	9.490	11.605	13.984	16.678	
For 2 :1 Fill Slope	C	4'-4"	4'-10 7/8"	5'-5 3/4"	6'-0 3/4"	6'-7 5/8"	7'-2 5/8"	7'-9 1/2"	8'-4 1/2"	C
	F	0'-6 1/2"	0'-7"	0'-7 1/2"	0'-8"	0'-8 1/2"	0'-9"	0'-9 1/2"	0'-10"	F
	G	4'-3"	4'-9"	5'-3"	5'-9"	6'-3"	6'-9"	7'-3"	7'-9"	G
	I	1'-10 3/4"	2'-0 1/4"	2'-2 3/4"	2'-5 1/4"	2'-7 3/4"	2'-10 1/4"	3'-0 3/4"	3'-3 1/4"	I
	J	5'-8 1/4"	6'-4"	7'-1"	7'-9 3/4"	8'-6 3/4"	9'-3 1/2"	10'-0 1/2"	10'-9 1/8"	J
	L	8'-8"	9'-9 3/4"	10'-11 5/8"	12'-1 1/2"	13'-3 3/8"	14'-5 1/4"	15'-7"	16'-9"	L
	M	1'-1 1/8"	1'-2"	1'-3 1/2"	1'-4 7/8"	1'-6 3/8"	1'-7 3/4"	1'-9 1/4"	1'-10 5/8"	M
	P	7'-6"	8'-6"	9'-6"	10'-6"	11'-6"	12'-6"	13'-6"	14'-6"	P
	R	1'-0 3/4"	1'-2 1/4"	1'-3 3/4"	1'-5 1/4"	1'-6 3/4"	1'-8 1/4"	1'-9 3/4"	1'-11 1/4"	R
Cu. Yds. Conc.	Conc.	4.238	5.230	6.761	8.538	10.602	12.958	15.612	18.623	
	CMP	4.469	5.536	7.177	9.088	11.312	13.856	16.730	19.993	
	a	0'-5 1/2"	0'-6"	0'-7"	0'-7 1/2"	0'-8 1/2"	0'-9"	0'-10"	0'-10 1/2"	a
	b	0'-3 1/2"	0'-4"	0'-4 1/2"	0'-5"	0'-5 1/2"	0'-6"	0'-6 1/2"	0'-7"	b

U.S. DEPARTMENT OF TRANSPORTATION
FEDERAL HIGHWAY ADMINISTRATION
FEDERAL LANDS HIGHWAY

STANDARD

CONCRETE WINGWALLS FOR SINGLE NORMAL 42" TO 84" PIPE CULVERTS

STANDARD APPROVED FOR USE --/----

REVISED:

STANDARD
601-5

02/26/2003 11:45:35 AM M:\Standard\English\st601\d05.dgn