REG	STATE	PROJECT	SHEET NO.

NOTE:

1. D equals the diameter of all round pipe or the rise dimension of all pipe arch culverts.

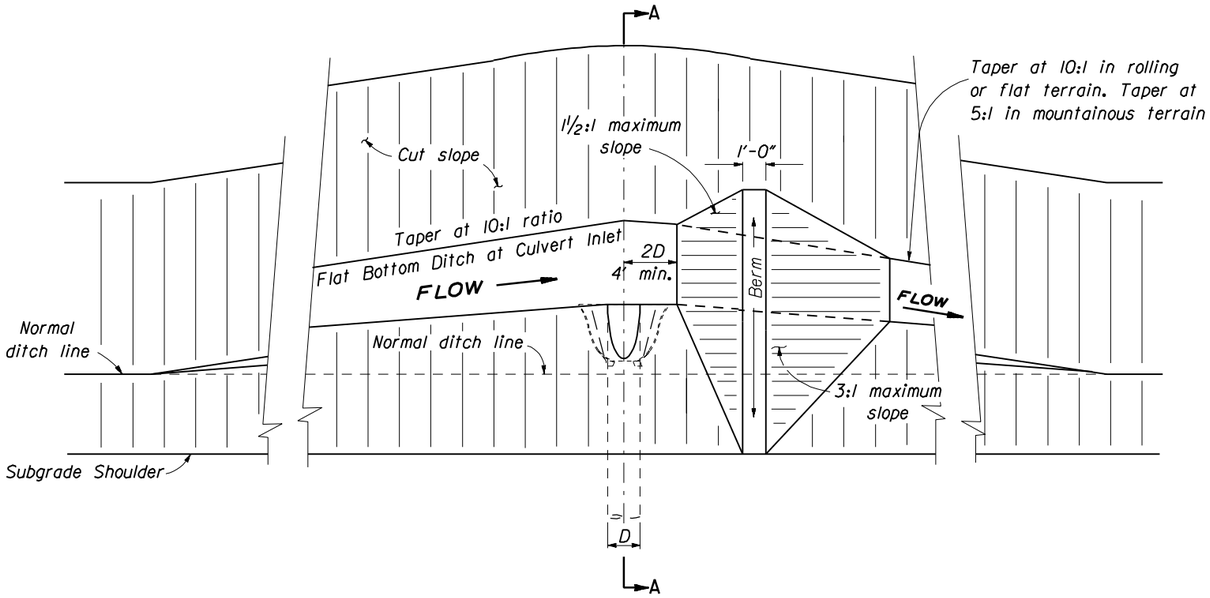

PLAN

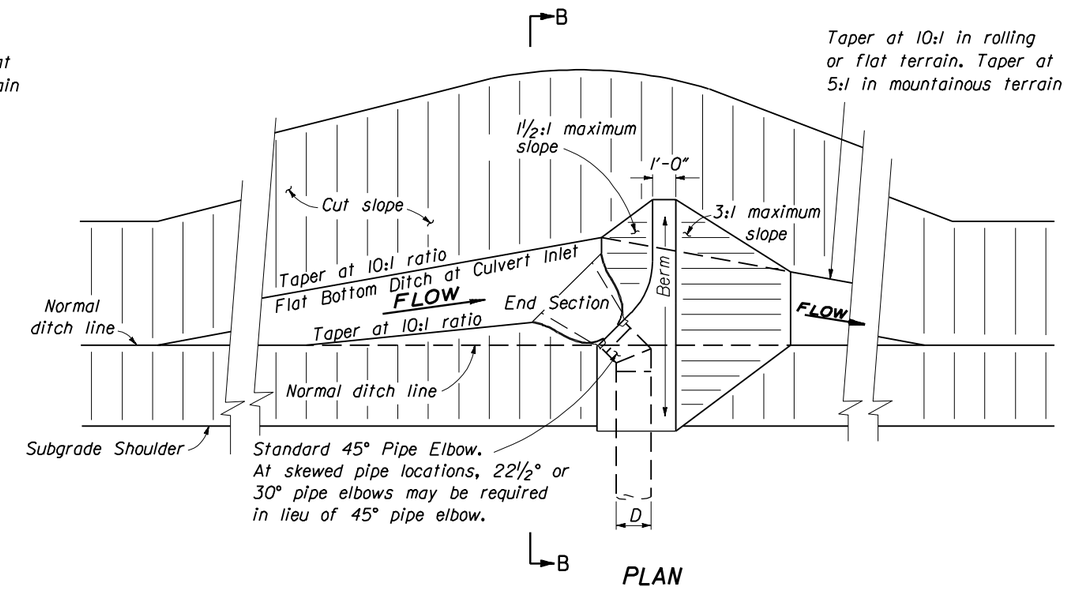

PLAN

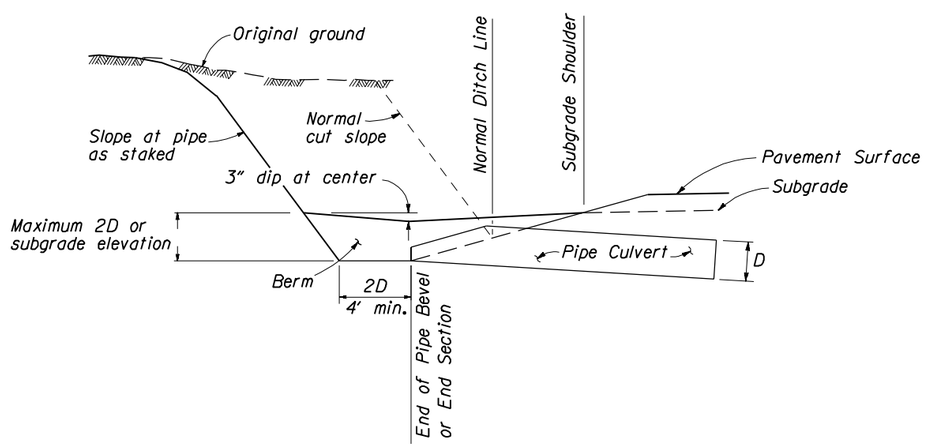

TYPE I
SECTION A-A

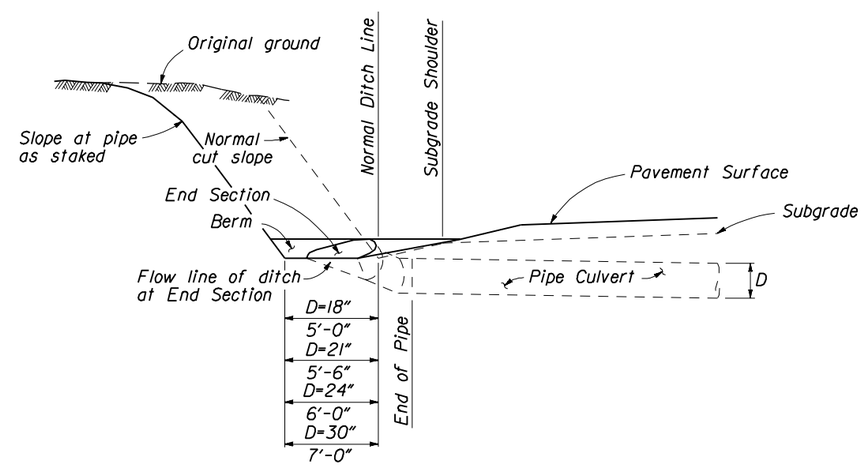

TYPE II
SECTION B-B

NO SCALE

U.S. DEPARTMENT OF TRANSPORTATION
FEDERAL HIGHWAY ADMINISTRATION
FEDERAL LANDS HIGHWAY

STANDARD

PIPE CULVERT INLET TREATMENT IN CUT SLOPES

STANDARD APPROVED FOR USE --/----

REVISED:

STANDARD
602-6

02/26/2003 11:51:28 AM M:\Standard\English\std602x06.dgn