REG	STATE	PROJECT	SHEET NO.

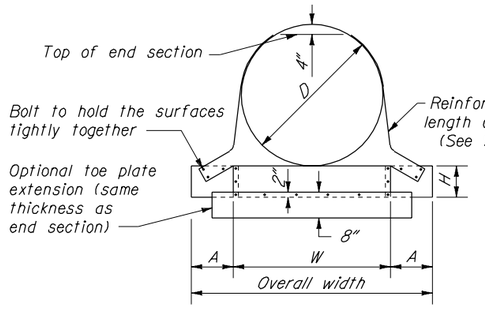

FRONT VIEW
ROUND PIPE CULVERT

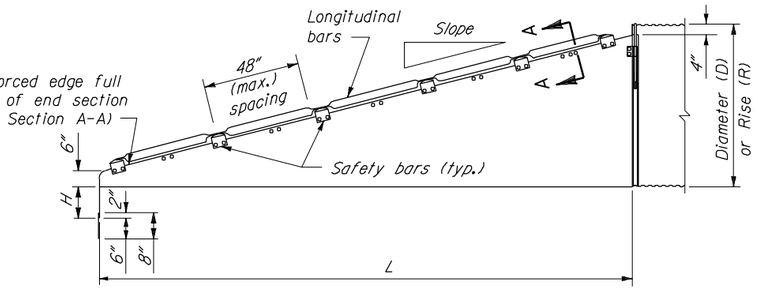

ELEVATION
CROSS DRAINAGE END SECTION

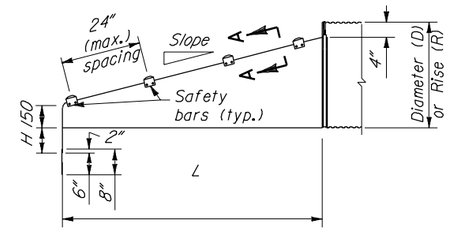

ELEVATION
PARALLEL DRAINAGE END SECTION

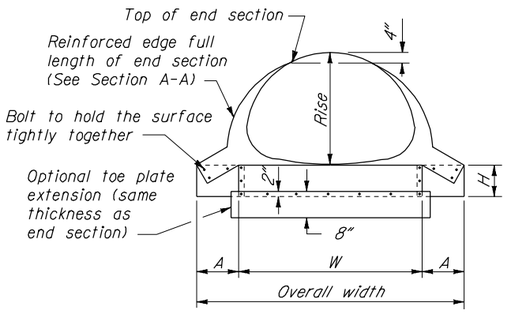

FRONT VIEW
PIPE ARCH CULVERT

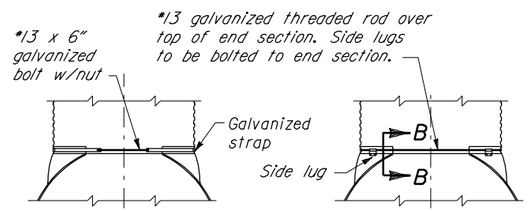

FOR METAL ROUND PIPES 15" THRU 24"
TYPE #1

FOR METAL ROUND PIPES 30" AND LARGER. FOR PIPE ARCHES 21" x 15" AND LARGER
TYPE #2

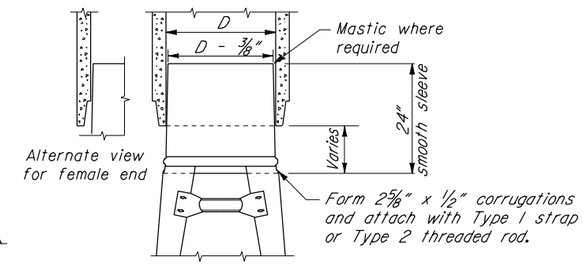

FOR ALL SIZES OF CONCRETE ROUND OR PIPE ARCHES
TYPE #3

CONNECTOR DETAILS

NOTES:

1. Use end sections on 4:1 to 6:1 slopes only. Use toe plate extension where shown on the plans.
2. Fabricate safety and longitudinal bars from steel pipe conforming to ASTM A53 schedule 40 specifications. Galvanize bars hot dipped after fabrication.
3. A longitudinal bar is required for cross drainage end sections when the span is greater than 30". Use additional longitudinal bars if spacing exceeds 30" on larger end sections.
4. Safety and longitudinal bars are not required on 30" and smaller cross drainage end sections.
5. Safety bars are not required on 18" and smaller parallel drainage end sections.
6. 18" diameter sleeves have a thickness of 5/64 ", all others are 7/64 ".
7. Provide hardware in the metric sizes shown. Equivalent imperial sizes may be used when metric sizes are not available.

METAL END SECTIONS FOR ROUND PIPE CULVERT

DIMENSIONS IN INCHES									
PIPE DIA.	(MIN.) THICK	A	H	W	OVERALL WIDTH	SLOPE	L	SLOPE	L
18	1/16	8	6	24	40	4:1	32	6:1	48
24	1/16	8	6	30	45	4:1	55	6:1	83
30	1/8	12	9	36	60	4:1	79	6:1	118
36	1/8	12	9	42	65	4:1	102	6:1	154
42	1/8	16	12	48	70	4:1	126	6:1	189
48	1/8	16	12	54	75	4:1	150	6:1	224
54	1/8	16	12	60	80	4:1	173	6:1	260
60	1/8	16	12	66	85	4:1	197	6:1	295

METAL END SECTIONS FOR PIPE ARCH CULVERT

DIMENSIONS IN INCHES											
EQUIV. DIA.	SPAN	RISE	(MIN.) THICK	A	H	W	OVERALL WIDTH	SLOPE	L	SLOPE	L
18	21	15	1/16	8	6	27	42	4:1	20	6:1	30
24	28	20	1/16	8	6	33	49	4:1	40	6:1	60
30	34	24	1/8	12	9	40	64	4:1	55	6:1	83
36	41	29	1/8	12	9	47	71	4:1	75	6:1	112
42	48	32	1/8	16	12	54	86	4:1	90	6:1	136
48	56	37	1/8	16	12	62	94	4:1	110	6:1	165
54	63	42	1/8	16	12	69	100	4:1	130	6:1	195
60	70	46	1/8	16	12	76	107	4:1	146	6:1	218
66	82	56	1/8	16	12	88	119	4:1	185	6:1	278

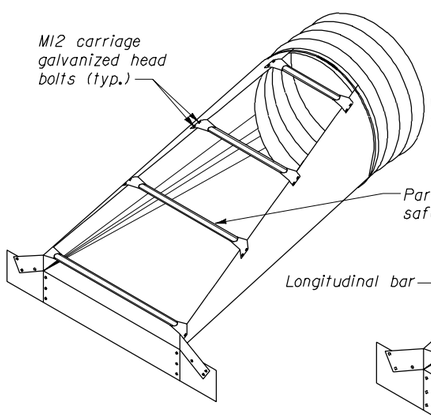

PARALLEL DRAINAGE END SECTION

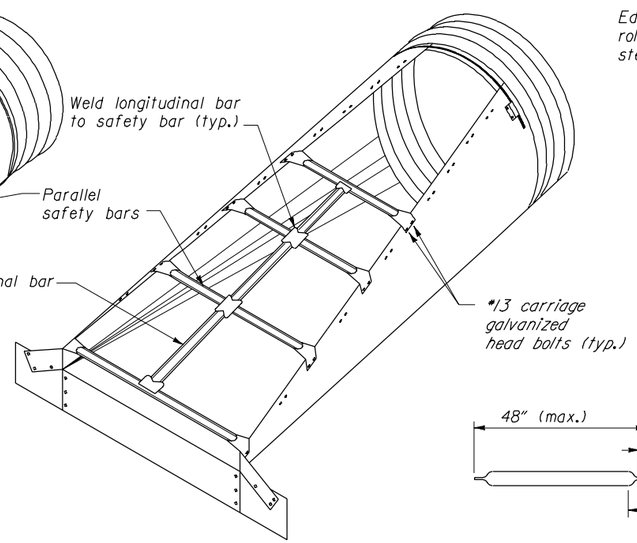

CROSS DRAINAGE END SECTION

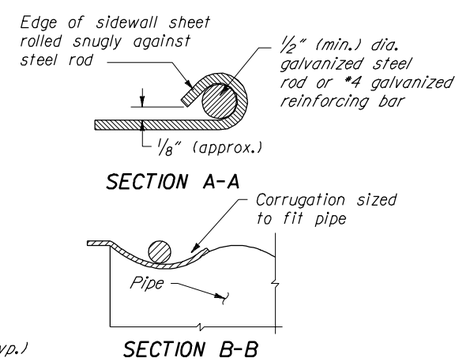

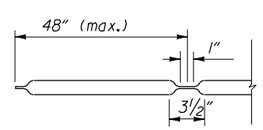

LONGITUDINAL DRAINAGE BAR

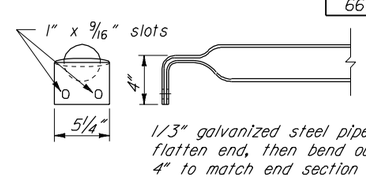

PARALLEL BARS

SAFETY BAR DETAILS

NO SCALE

U.S. DEPARTMENT OF TRANSPORTATION
FEDERAL HIGHWAY ADMINISTRATION
FEDERAL LANDS HIGHWAY

STANDARD

METAL END SECTIONS WITH SAFETY BARS

STANDARD APPROVED FOR USE --/----

REVISED:

STANDARD
602-9

02/26/2003 11:52:12 AM M:\Standard\English\st602x09.dgn