REG	STATE	PROJECT	SHEET NO.

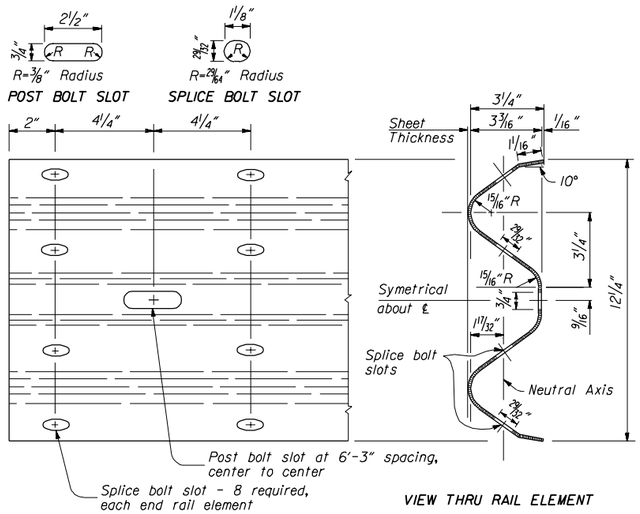

RAIL MEMBERS
ARTBA RE-3-73

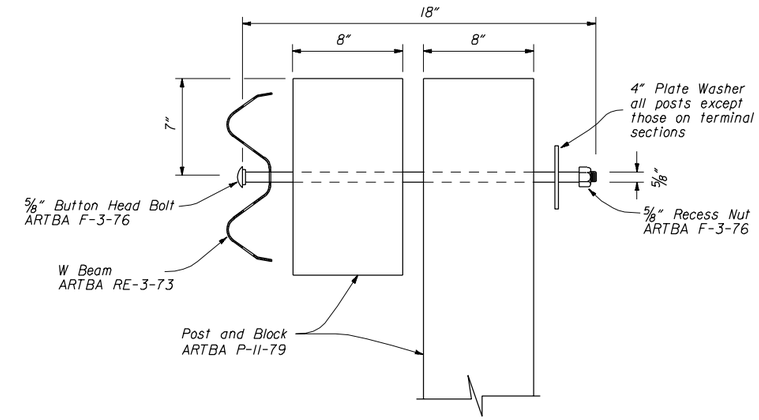

POST BOLT ASSEMBLY

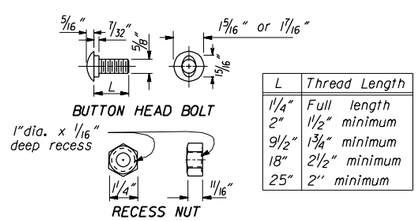

L	Thread Length
1 1/4"	Full length
2"	1 1/2" minimum
9 1/2"	1 3/4" minimum
18"	2 1/2" minimum
25"	2" minimum

BUTTON HEAD BOLT AND RECESS NUT
ARTBA F-3-76

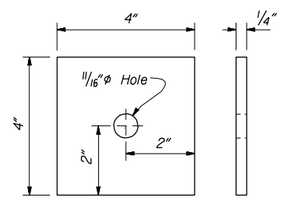

PLATE WASHER
No ARTBA Designation

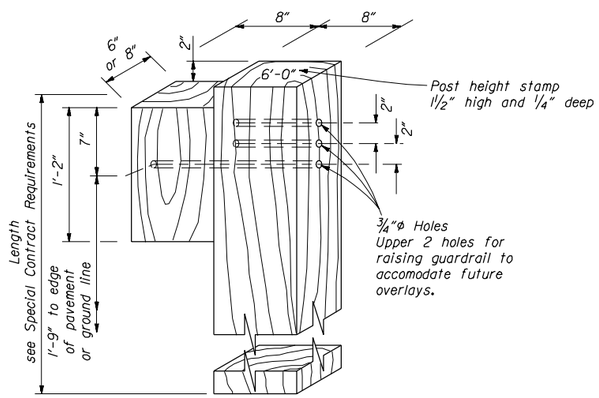

ALTERNATE HOLE ARRANGEMENT
POST AND BLOCK DETAIL
ARTBA P-11-79

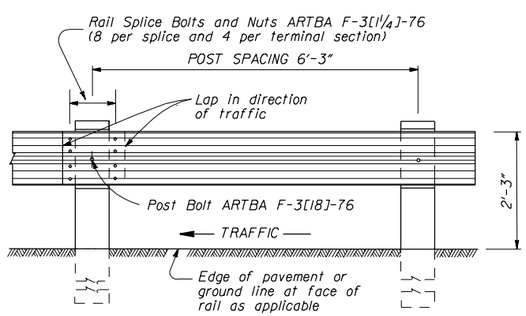

POST SPACING
STANDARD POST SECTION

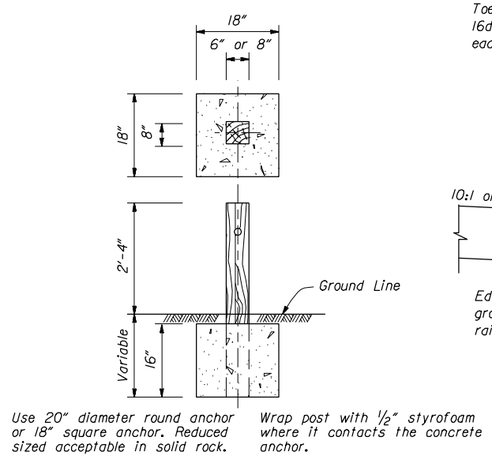

CONCRETE ANCHOR FOR
SHORT GUARDRAIL POST

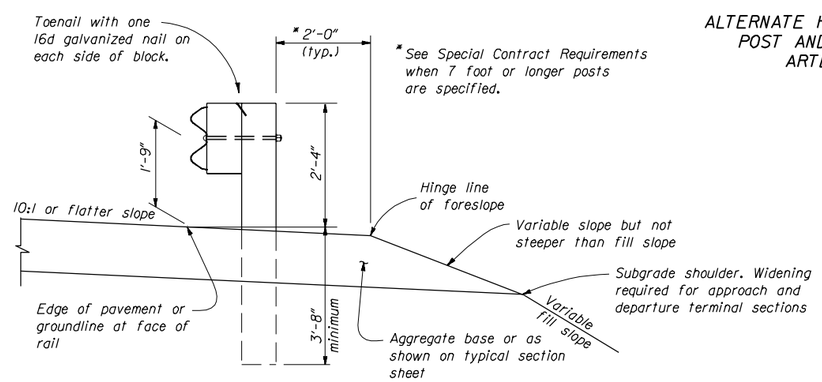

TYPICAL GUARDRAIL CROSS SECTION

U.S. DEPARTMENT OF TRANSPORTATION
FEDERAL HIGHWAY ADMINISTRATION
FEDERAL LANDS HIGHWAY

STANDARD

G4 W BEAM GUARDRAIL WOOD POSTS

STANDARD APPROVED FOR USE --/----

REVISED:

STANDARD
617-10

02/26/2003 12:47:58 PM M:\Standard\English\std617x10.dgn