REG	STATE	PROJECT	SHEET NO.

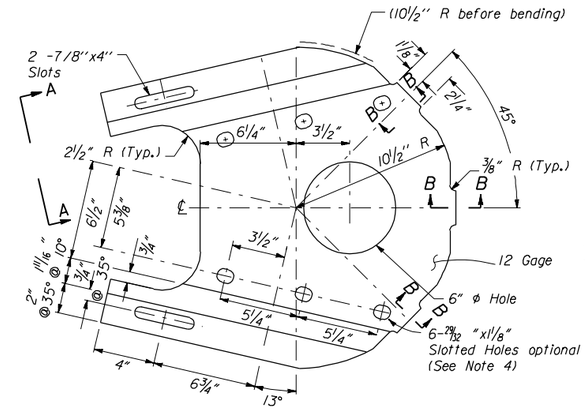

DIAPHRAGM PLATE DETAIL
(2 Required each Terminal)

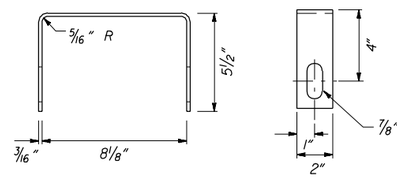

YOKE DETAILS

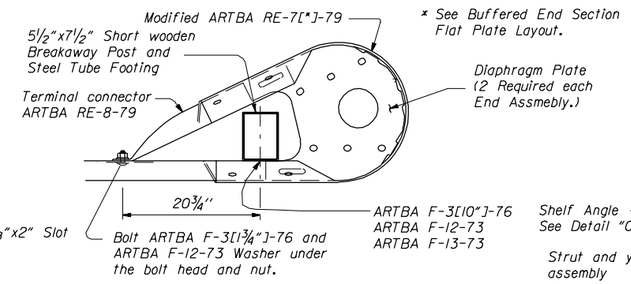

BUFFERED END SECTION ASSEMBLY

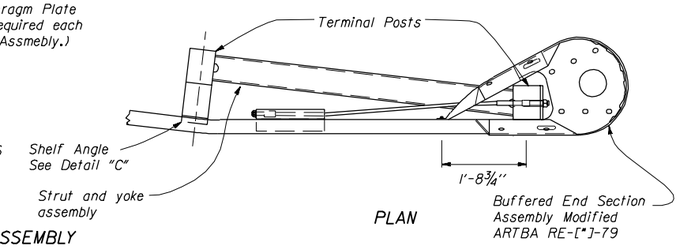

PLAN

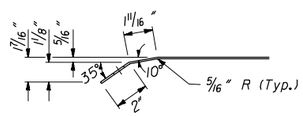

DIAPHRAGM PLATE DETAIL
VIEW A-A

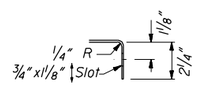

DIAPHRAGM PLATE DETAIL
SECTION B-B

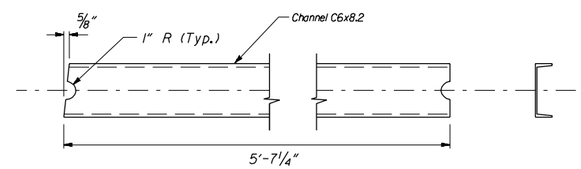

STRUT DETAILS

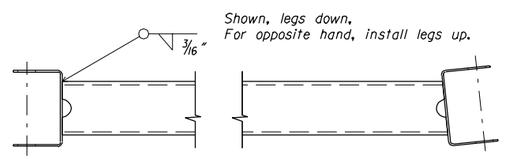

STRUT AND YOKE ASSEMBLY

BUFFERED END SECTION
PLAN

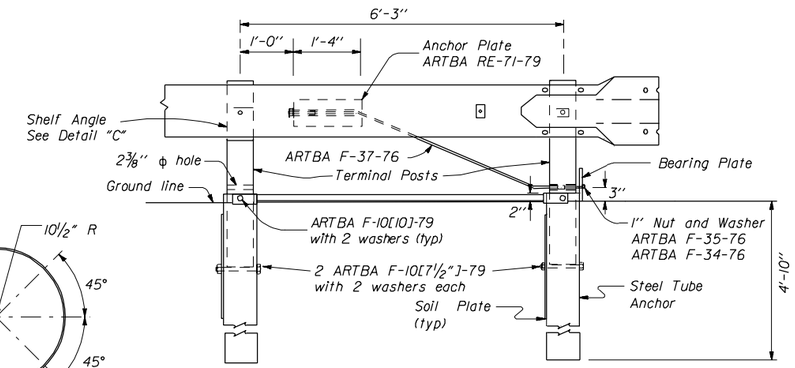

ANCHORAGE ASSEMBLY
ELEVATION

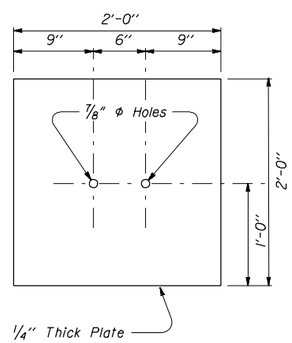

SOIL PLATE (2 Req'd)

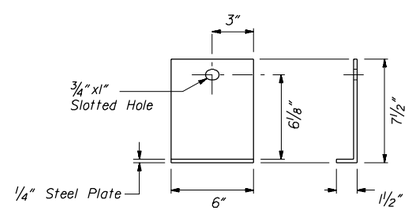

DETAIL "C"
SHELF ANGLE

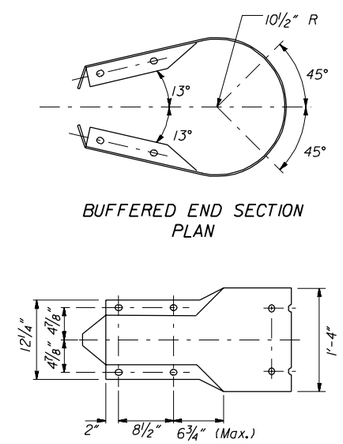

BUFFERED END SECTION
ELEVATION

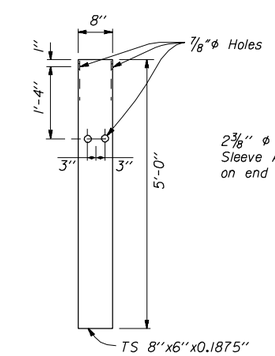

STEEL TUBE ANCHOR

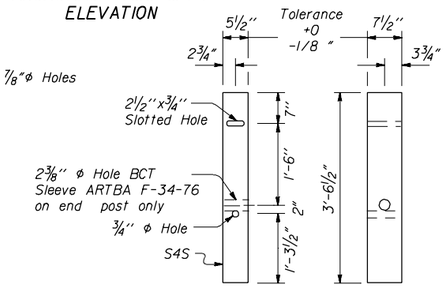

TERMINAL POST

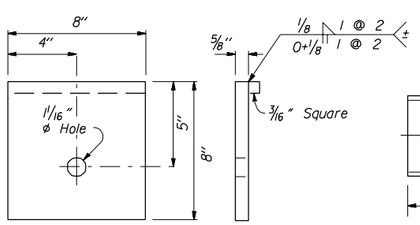

BEARING PLATE

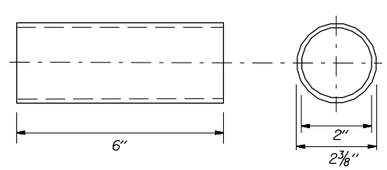

BREAKAWAY TERMINAL
POST SLEEVE
ARTBA F-34-76

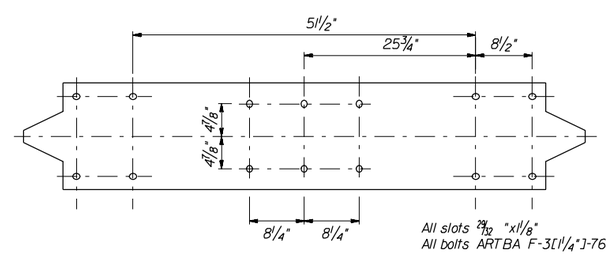

BUFFERED END SECTION
FLAT PLATE LAYOUT
(Modified ARTBA RE-7-79)

U.S. DEPARTMENT OF TRANSPORTATION
FEDERAL HIGHWAY ADMINISTRATION
FEDERAL LANDS HIGHWAY

STANDARD

G4 W BEAM GUARDRAIL MODIFIED ECCENTRIC LOADER TERMINAL MELT ANCHORAGE ASSEMBLY

STANDARD APPROVED FOR USE --/----

REVISED:

STANDARD
617-12

02/26/2003 12:48:43 PM M:\Standard\English\st617x12.dgn