REG	STATE	PROJECT	SHEET NO.

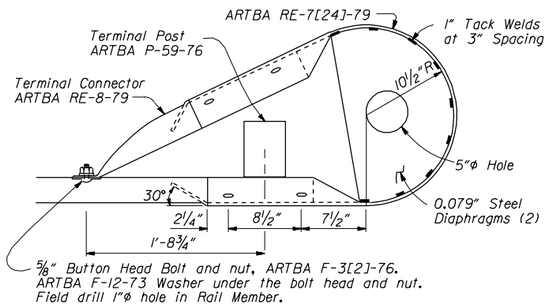

PLAN

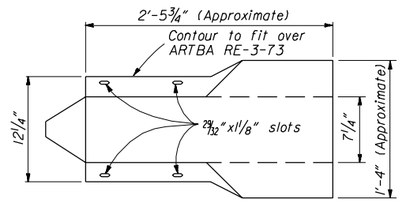

ELEVATION

TYPE I END SECTION ASSEMBLY
ARTBA RE-7[24]-79

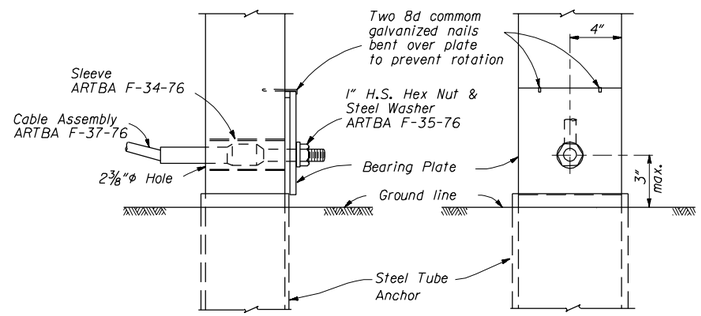

DETAIL "A"

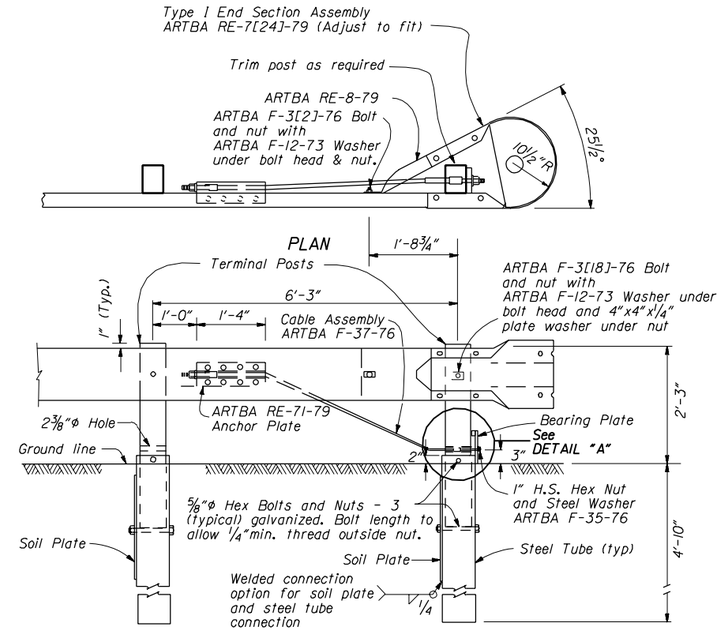

ELEVATION

ANCHORAGE ASSEMBLY

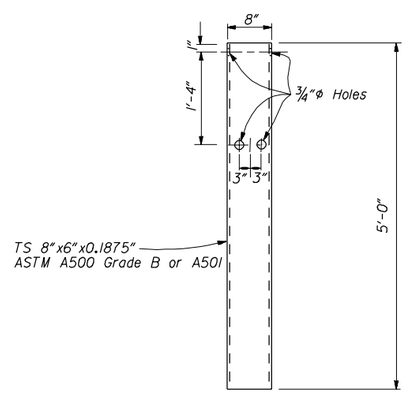

STEEL TUBE

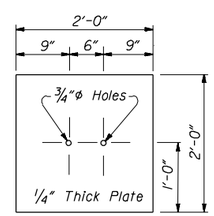

SOIL PLATE (2 Req'd)

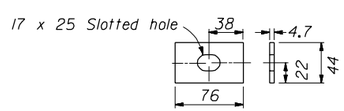

(Use to attach the end section to the end post of Anchorage Assembly)

RECTANGULAR PLATE WASHER

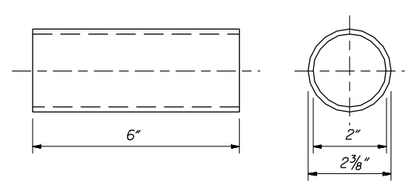

BREAKAWAY TERMINAL POST SLEEVE
ARTBA F-34-76

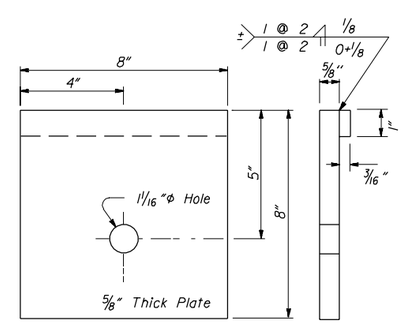

BEARING PLATE
(MODIFIED ARTBA F-36-79)

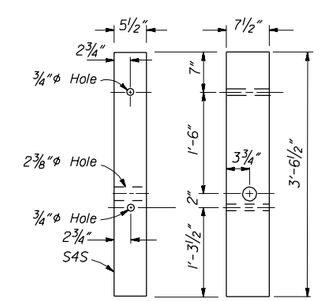

TERMINAL POST
(MODIFIED ARTBA P-59-76)

U.S. DEPARTMENT OF TRANSPORTATION
FEDERAL HIGHWAY ADMINISTRATION
FEDERAL LANDS HIGHWAY

STANDARD

G4 W BEAM GUARDRAIL
STEEL TUBE ANCHOR
BCT ANCHORAGE ASSEMBLY
WOOD POSTS

STANDARD APPROVED FOR USE --/----
REVISED:

STANDARD
617-15

02/26/2003 12:49:40 PM M:\Standard\English\st617x15.dgn