REG	STATE	PROJECT	SHEET NO.

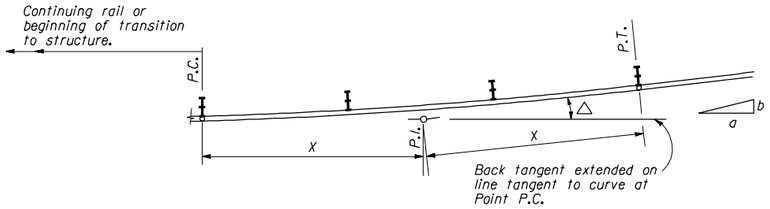

DESIGN SPEED	a:b	△	RADIUS (FT.)	X (FT.)
70 MPH	15:1	3°48'51"	281.67	9.38
60 MPH	13:1	4°23'55"	244.23	9.38
50 MPH	11:1	5°11'40"	206.82	9.38
40 MPH	9:1	6°20'25"	169.44	9.38
30 MPH	7:1	8°07'48"	132.14	9.39

DETAIL "A"

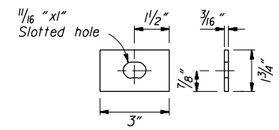

RECTANGULAR PLATE WASHER
ARTBA F-12-73

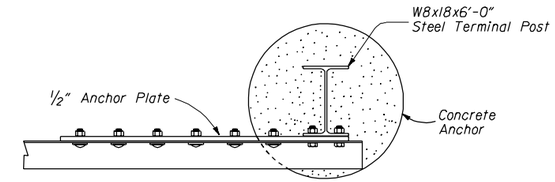

PLAN

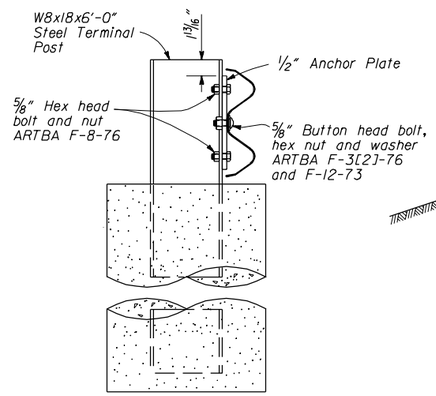

SIDE

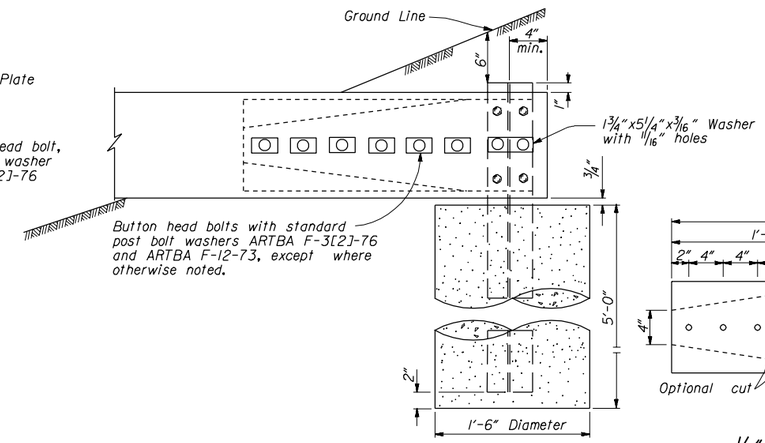

ELEVATION

BACK SLOPE ANCHOR ASSEMBLY
No ARTBA Designation

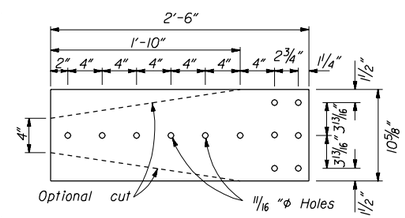

1/2" ANCHOR PLATE

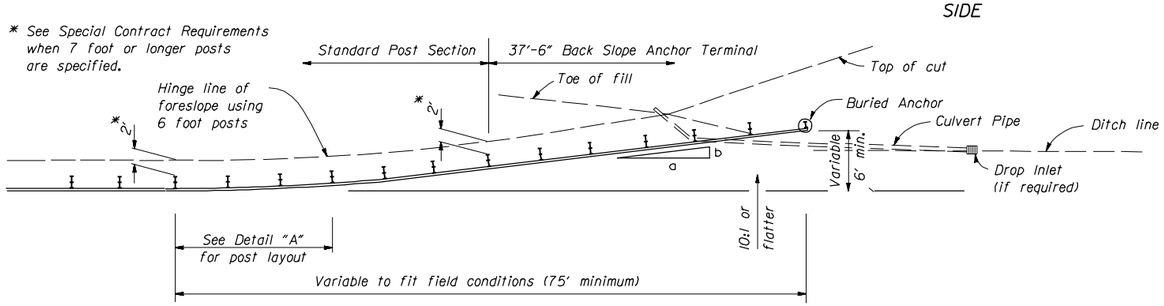

PLAN

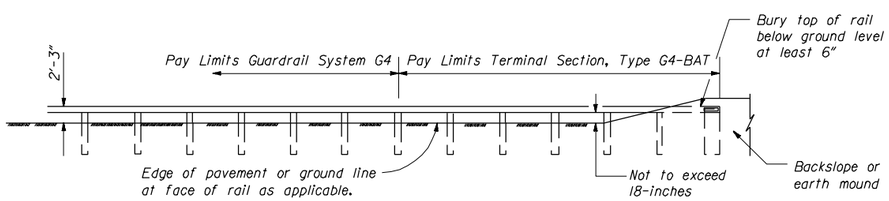

ELEVATION

APPROACH & DEPARTURE FLARE
WITH BACK SLOPE ANCHOR TERMINAL

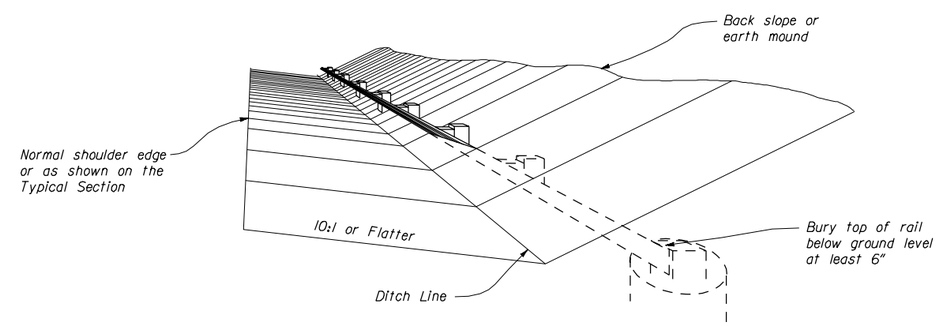

PERSPECTIVE VIEW

U.S. DEPARTMENT OF TRANSPORTATION
FEDERAL HIGHWAY ADMINISTRATION
FEDERAL LANDS HIGHWAY

STANDARD

G4 W BEAM GUARDRAIL BACK SLOPE ANCHOR TERMINAL WOOD OR STEEL POSTS TERMINAL SECTION, TYPE G4-BAT

STANDARD APPROVED FOR USE --/----

REVISED:

STANDARD
617-17

02/26/2003 12:50:31 PM M:\Standard\English\St617x1T.dgn