REG	STATE	PROJECT	SHEET NO.

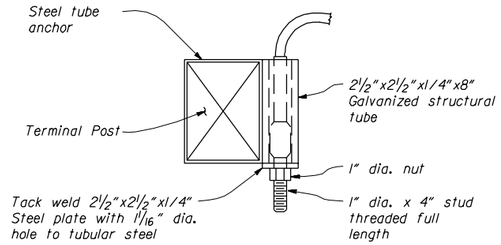

DETAIL 'A'

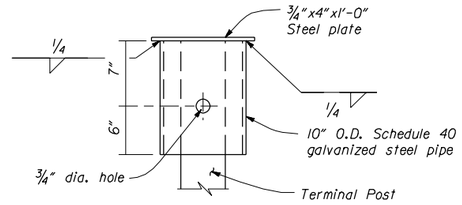

DETAIL 'B'

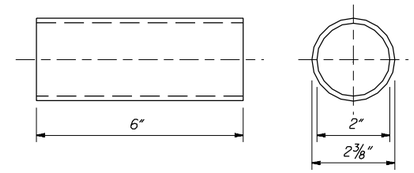

BREAKAWAY TERMINAL POST SLEEVE
ARTBA F-34-76

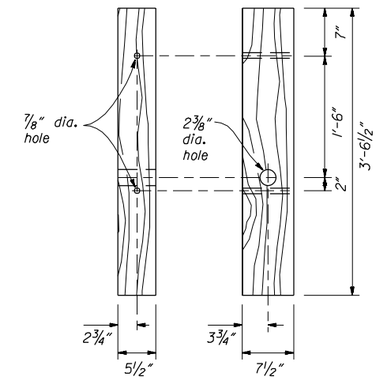

TERMINAL POST

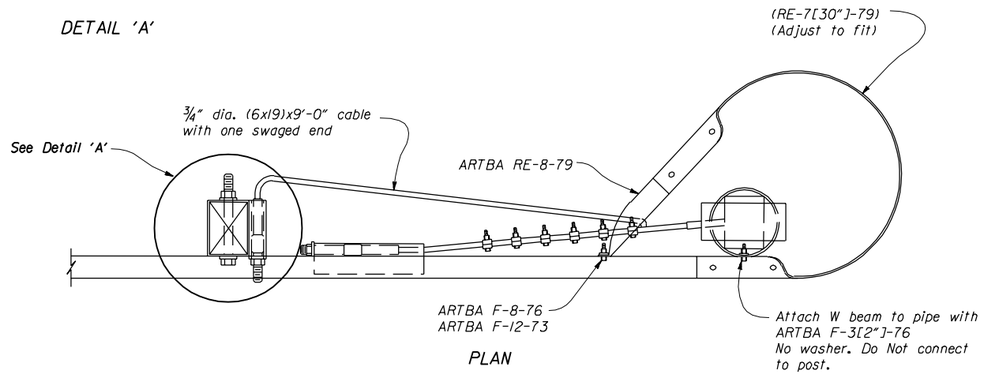

PLAN

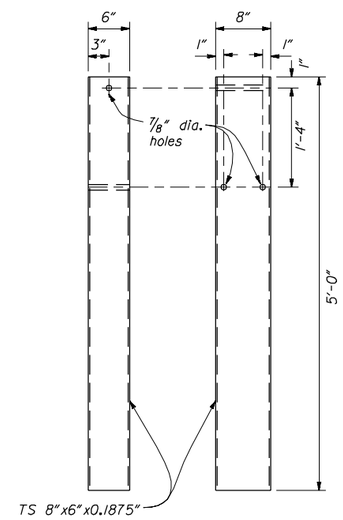

STEEL TUBE ANCHOR

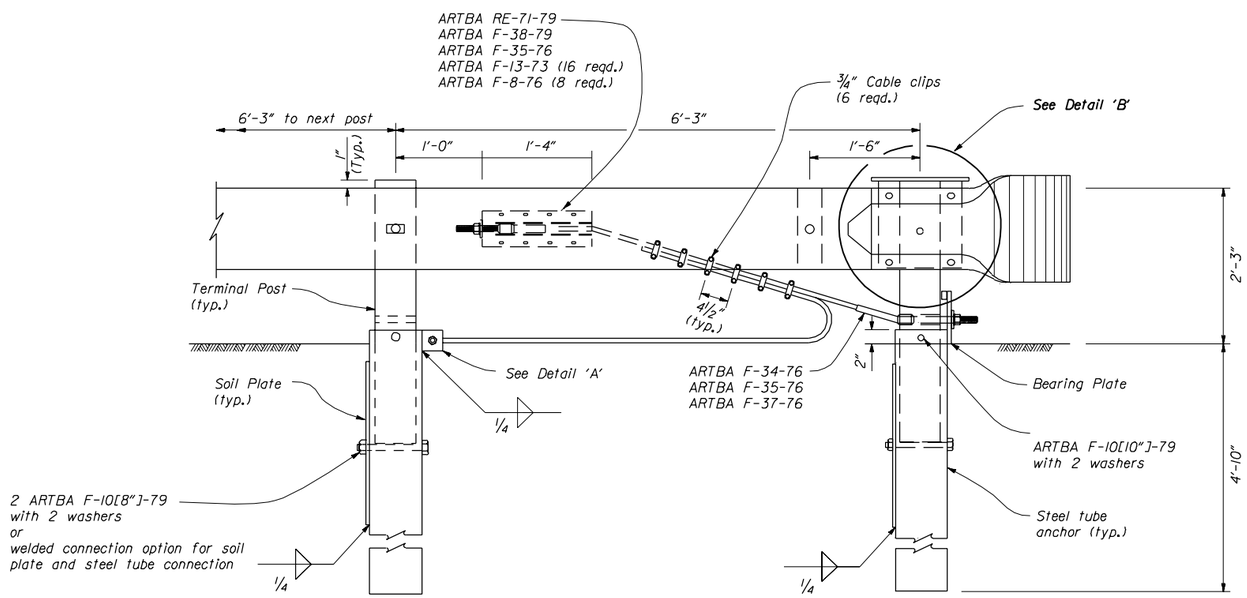

ELEVATION

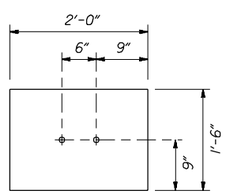

SOIL PLATE (2 Reqd.)

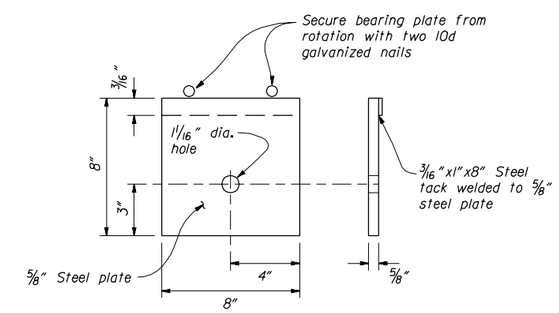

BEARING PLATE

U.S. DEPARTMENT OF TRANSPORTATION
FEDERAL HIGHWAY ADMINISTRATION
FEDERAL LANDS HIGHWAY

STANDARD

CRT W BEAM GUARDRAIL STEEL TUBE ANCHOR CRT ANCHORAGE ASSEMBLY CRT POSTS

STANDARD APPROVED FOR USE --/----

REVISED:

STANDARD 617-22

02/26/2003 12:54:10 PM M:\Standard\English\st617x22.dgn