REG	STATE	PROJECT	SHEET NO.

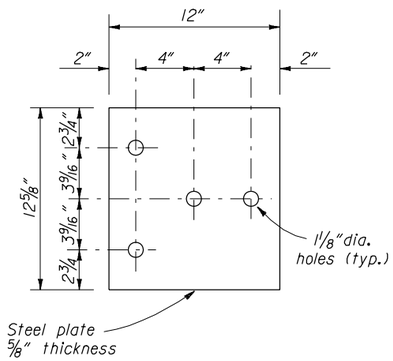

BEARING PLATE

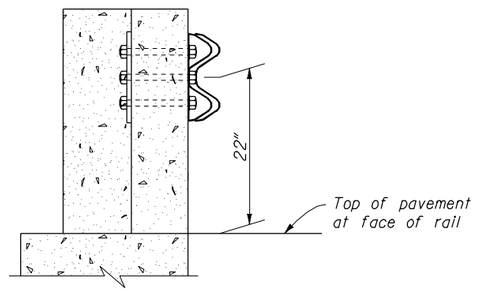

SECTION A-A

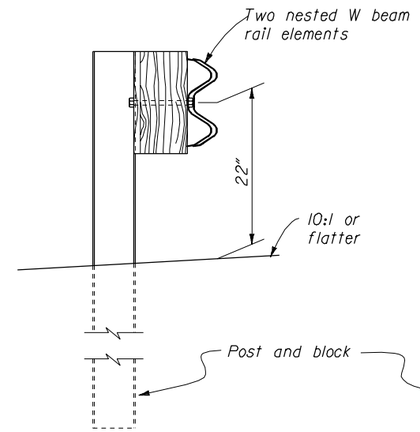

SECTION B-B

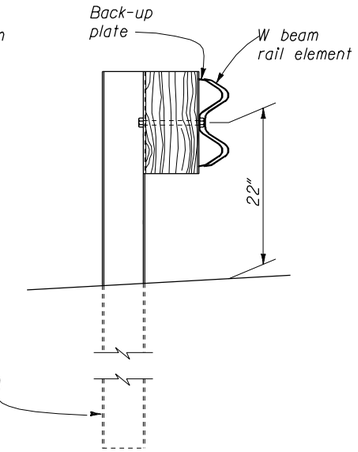

SECTION C-C

NOTES:

1. Reinforced concrete wall or bridge parapet must be capable of developing a 59.6 kips pull out strength.
2. Connect steel spacer tube to rail element only.
3. Where reinforced concrete flare back transition section is required, See Standard 617-32 or plan sheets, as appropriate, for details.

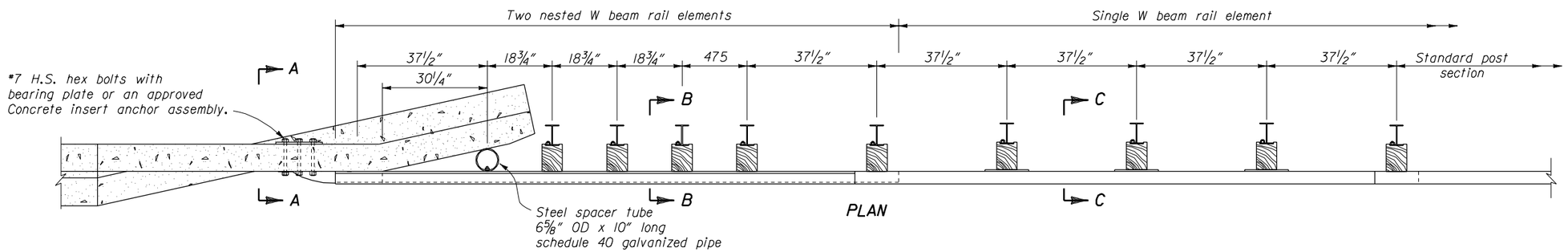

PLAN

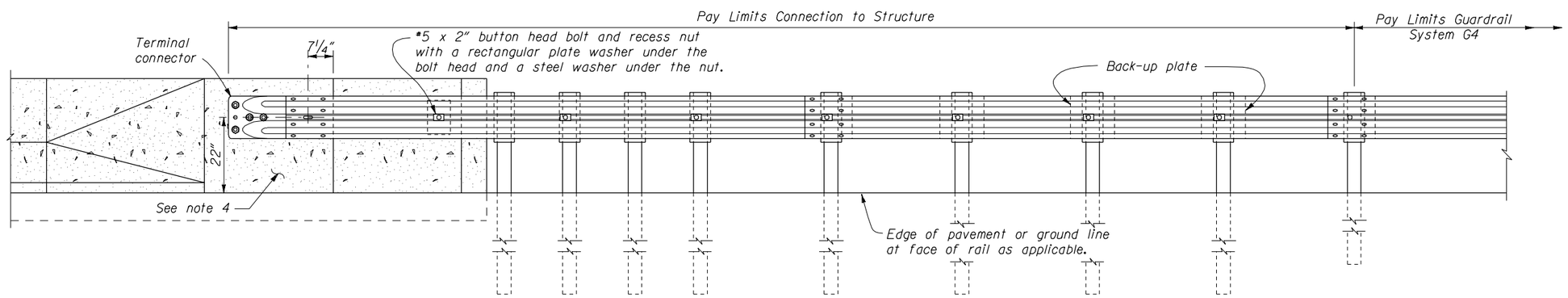

ELEVATION

NO SCALE

U.S. DEPARTMENT OF TRANSPORTATION
FEDERAL HIGHWAY ADMINISTRATION
FEDERAL LANDS HIGHWAY

STANDARD

G4 W BEAM GUARDRAIL CONNECTION TO STRUCTURE VERTICAL FLARED BACK STEEL POSTS

STANDARD APPROVED FOR USE --/----

REVISED: 6/99

STANDARD 617-31

02/26/2003 12:58:58 PM M:\Standard\English\std617x31.dgn