REG	STATE	PROJECT	SHEET NO.

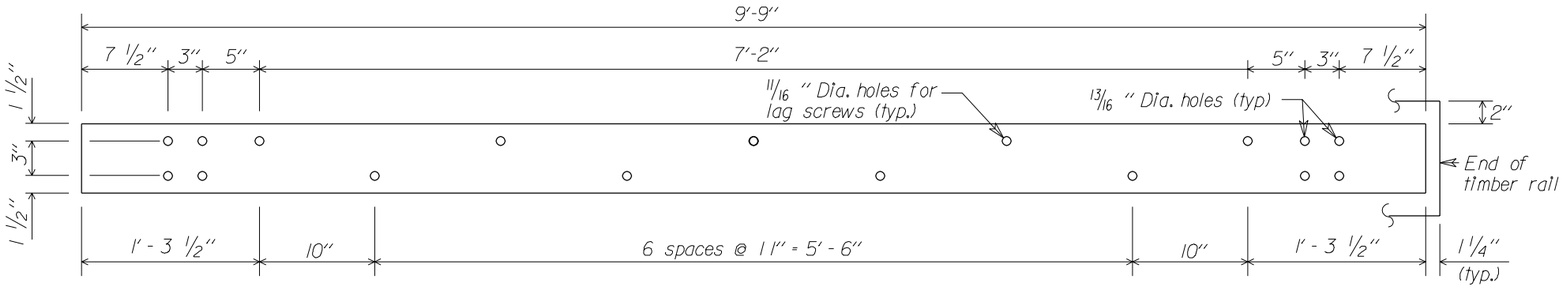

STEEL RAIL DETAIL
6" x 3/8" x 9'-9"

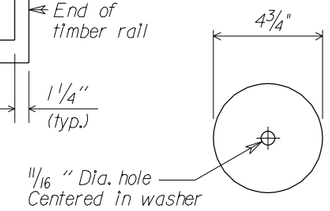

PLATE WASHER DETAIL
4 3/4" Dia. x 1/4"

Notes:

1. Use the Type A, blocked-out, system or the Type B, non-blocked-out, system as specified.
2. Use weathering steel for all structural steel and fastener hardware as specified.
3. Place a terminal section (See Standards 617-61 and 617-62) on both approach and trailing ends of barrier installations.

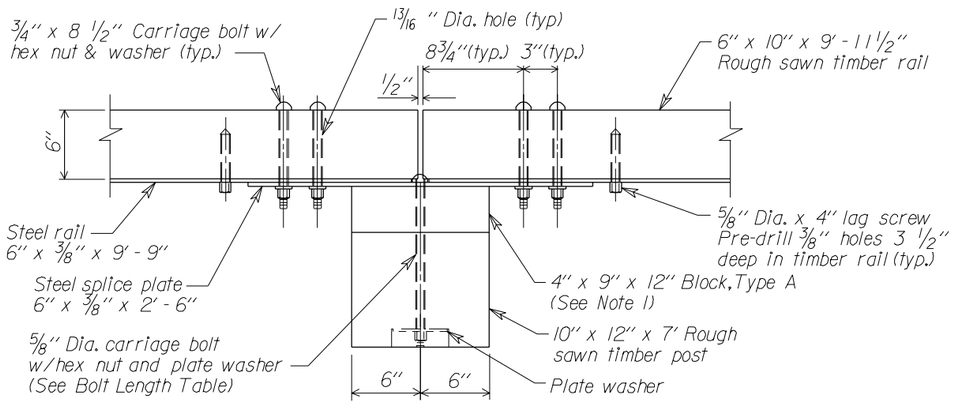

POST CONNECTION PLAN

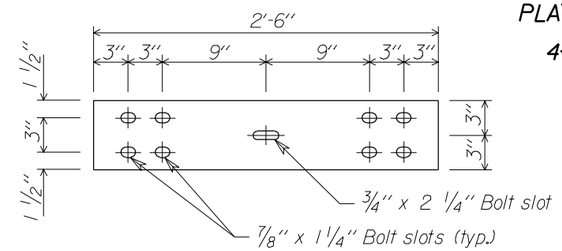

STEEL SPLICE PLATE DETAIL
6" x 3/8" x 2'-6"

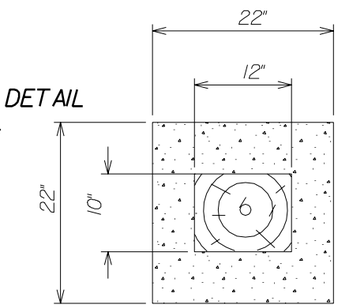

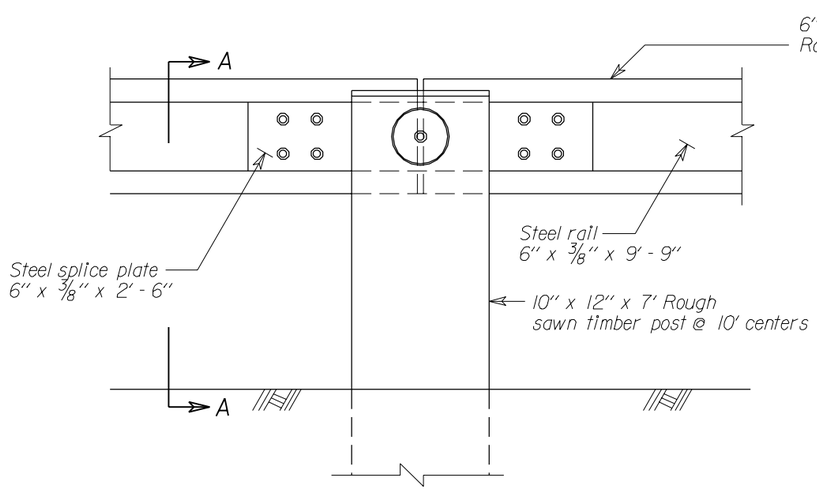

POST CONNECTION ELEVATION

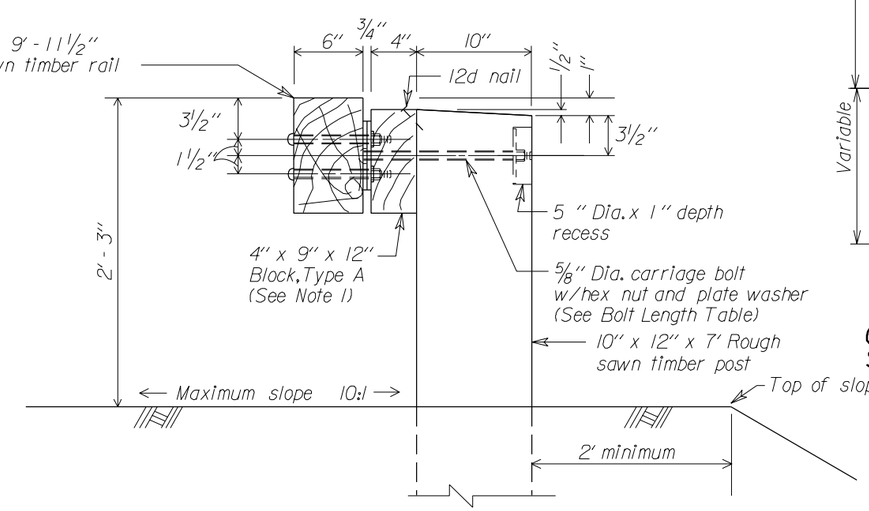

SECTION A-A

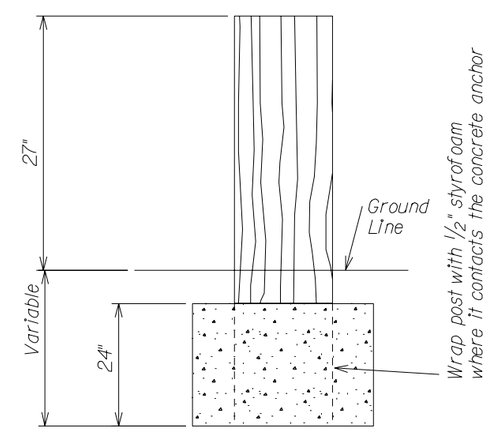

Use 25" dia. round anchor or 24" square anchor. Reduced size acceptable in solid rock.

CONCRETE ANCHOR FOR SHORT GUARDRAIL ASSEMBLY

No Scale

U.S. DEPARTMENT OF TRANSPORTATION
FEDERAL HIGHWAY ADMINISTRATION
FEDERAL LANDS HIGHWAY

STANDARD

STEEL-BACKED TIMBER GUARDRAIL, TYPE A & TYPE B

STANDARD APPROVED FOR USE --/----
REVISED:

STANDARD 617-60

02/26/2003 12:59:50 PM M:\Standard\English\st617x60.dgn