REG	STATE	PROJECT	SHEET NO.

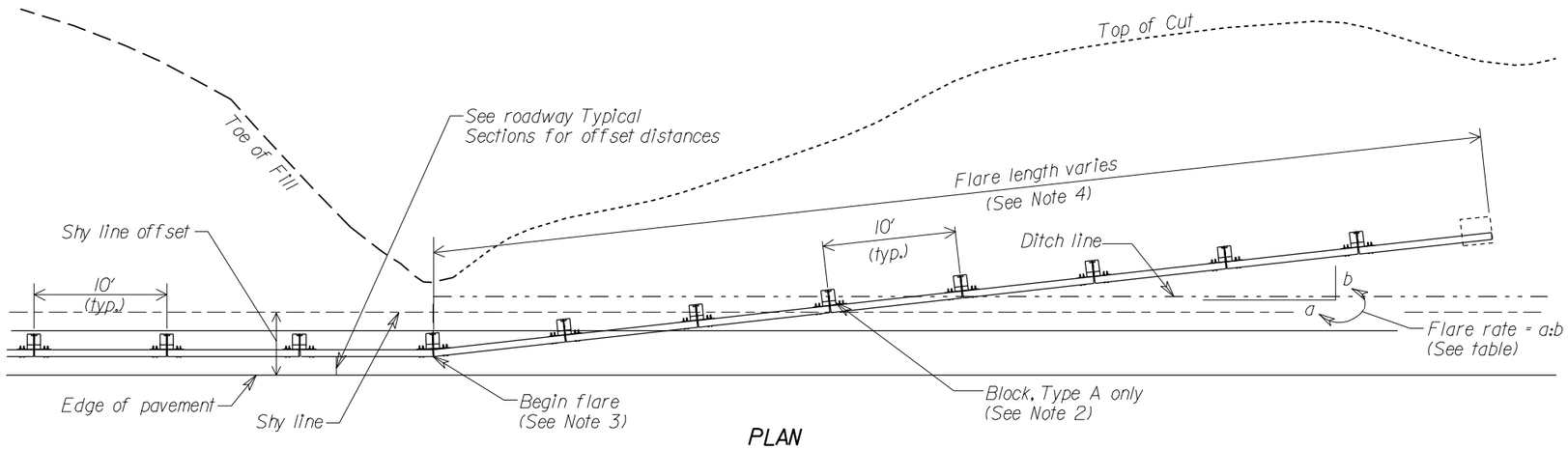

PLAN

TERMINAL SECTION, TYPE SBT-BAT
(STEEL-BACKED TIMBER BACKSLOPE ANCHORED TERMINAL)

Notes:

1. See Standard 617-60, Steel-Backed Timber Guardrail, Type A and B, for timber, structural steel, and hardware details.
2. On the Type A, blocked-out guardrail, include the blocks in the terminal section, except on the concrete anchor. For the Type B, non-blocked-out guardrail, no blocks are included.
3. Begin the cut flares at the nearest post to a transition point between fill and cut as directed by the CO.
4. Extend the flare into the cut until a minimum 1-foot cover is obtained over the guardrail end.

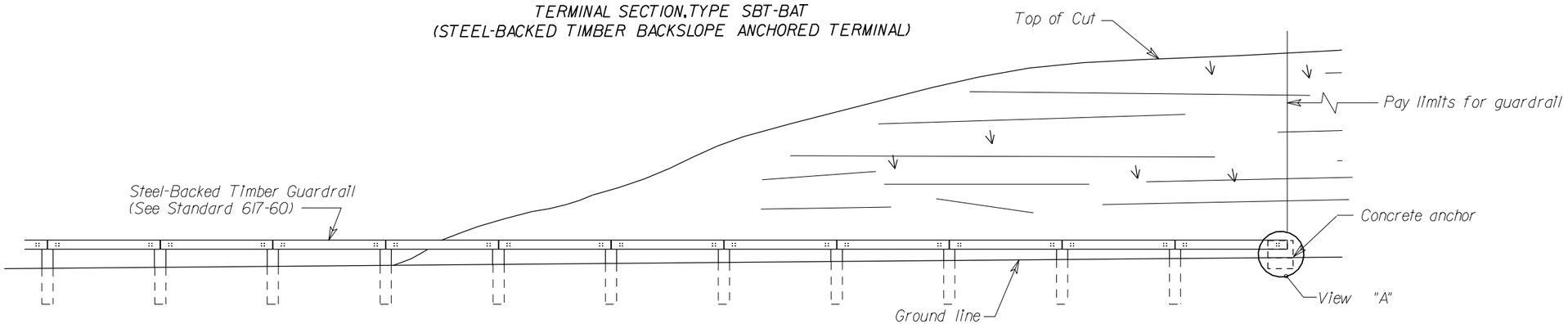

ELEVATION

GUARDRAIL FLARE RATES

Design Speed (mph)	Shy line offset (ft)	Flare rate inside shy line (a:b)	Flare rate outside shy line (a:b)
60	8.0	26:1	13:1
50	6.5	21:1	11:1
40	5.0	17:1	9:1
30 and less	3.5	13:1	7:1

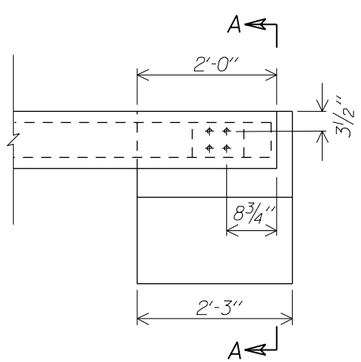

VIEW A

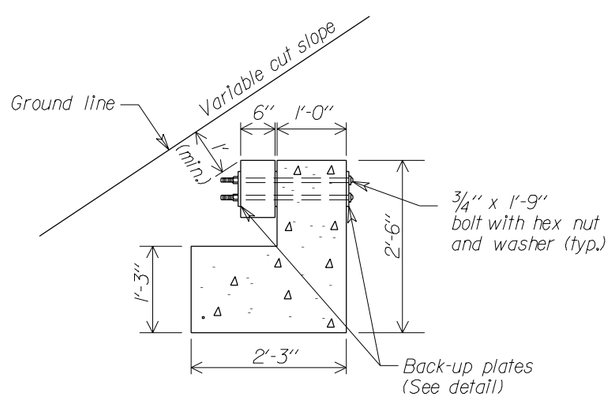

SECTION A-A

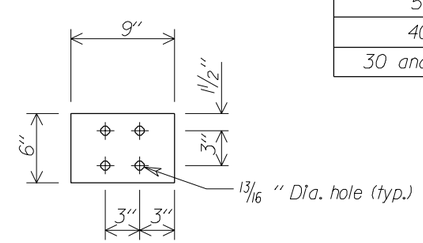

BACK-UP PLATE DETAIL
6″ x 1/2″ x 9″

No Scale

U.S. DEPARTMENT OF TRANSPORTATION
FEDERAL HIGHWAY ADMINISTRATION
FEDERAL LANDS HIGHWAY

STANDARD

STEEL-BACKED TIMBER GUARDRAIL TERMINAL SECTION, TYPE SBT-BAT

STANDARD APPROVED FOR USE --/----

REVISED:

STANDARD 617-62

02/26/2003 01:02:14 PM M:\Standard\Engl\sh\st617x62.dgn