REG	STATE	PROJECT	SHEET NO.

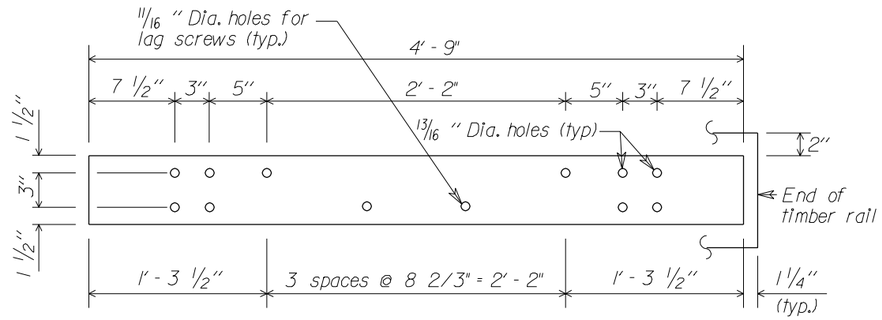

STEEL RAIL DETAIL
6" x 3/8" x 4'- 9"

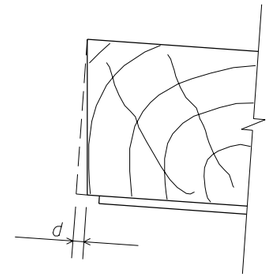

VIEW A

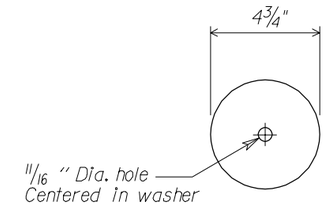

PLATE WASHER DETAIL
4 3/4" Dia. x 1/4"

Notes:

1. Use the Type A, blocked-out, system or the Type B, non-blocked-out, system as specified.
2. Use weathering steel for all structural steel and fastener hardware as specified.
3. Furnish shop bent splice plates. Use the minimum bend angle shown in the table below.
4. See Standard 617-64 for Plan View Layout.

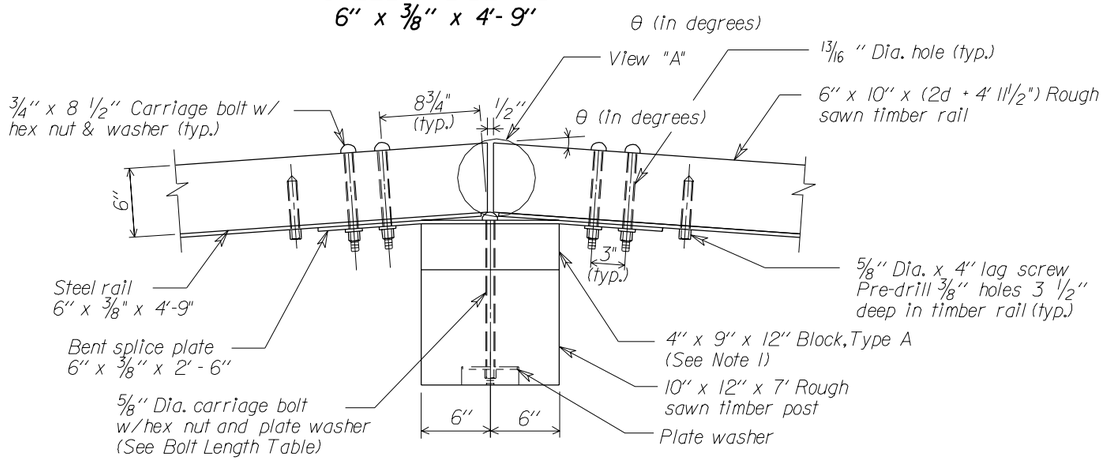

POST CONNECTION PLAN

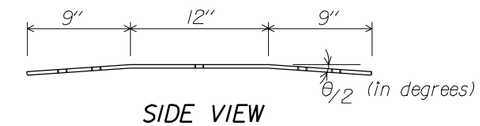

SIDE VIEW

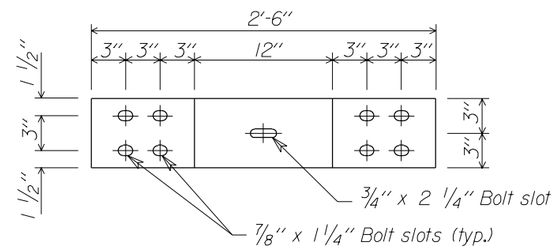

BENT SPLICE PLATE DETAIL
6" x 3/8" x 2'-6"

Radius R (ft.)	θ/2 (degrees)	d (inches)
25	5.74	5/8"
30	4.78	1/2"
35	4.10	5/16"
40	3.58	3/8"
45	3.18	1/3"
50	2.86	5/16"
55	2.60	1/4"
60	2.40	1/4"
65	2.20	1/4"
70	2.05	1/4"
Over 70	flat	0

Radius 70 and below

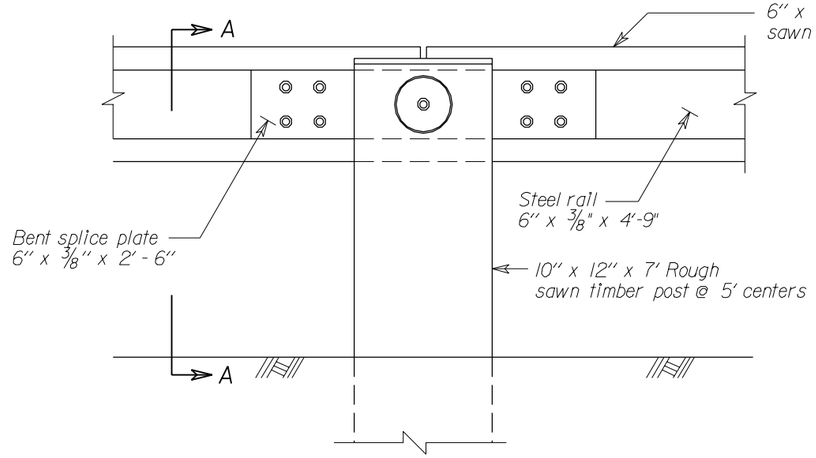

POST CONNECTION ELEVATION

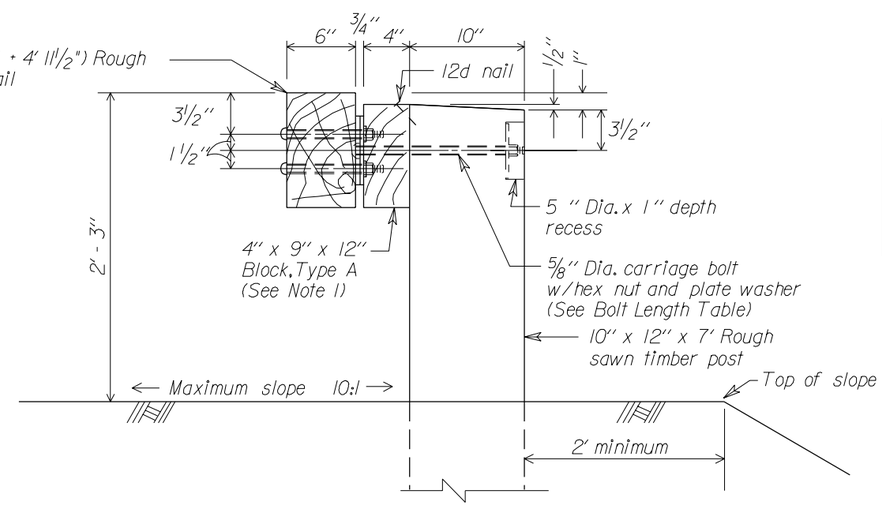

SECTION A-A

Type A (Block-out)	Type B (No Block-out)
1'-3"	11"

Bolt Lengths for Rail/Post Connection

No Scale

U.S. DEPARTMENT OF TRANSPORTATION
FEDERAL HIGHWAY ADMINISTRATION
FEDERAL LANDS HIGHWAY

STANDARD

STEEL-BACKED TIMBER GUARDRAIL AROUND CIRCULAR CURVES 70 FOOT RADIUS AND BELOW

STANDARD APPROVED FOR USE --/----

REVISED:

STANDARD 617-63

02/26/2003 01:02:54 PM M:\Standard\English\shs\617x63.dgn