REG	STATE	PROJECT	SHEET NO.

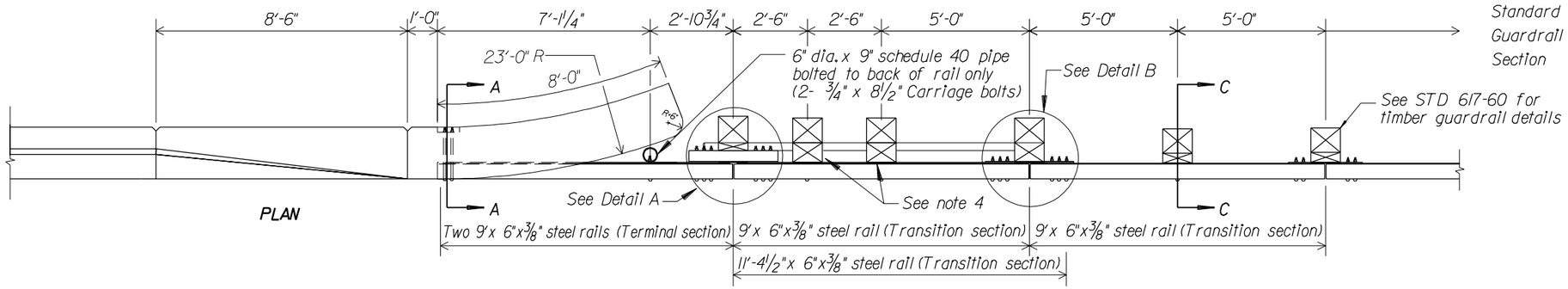

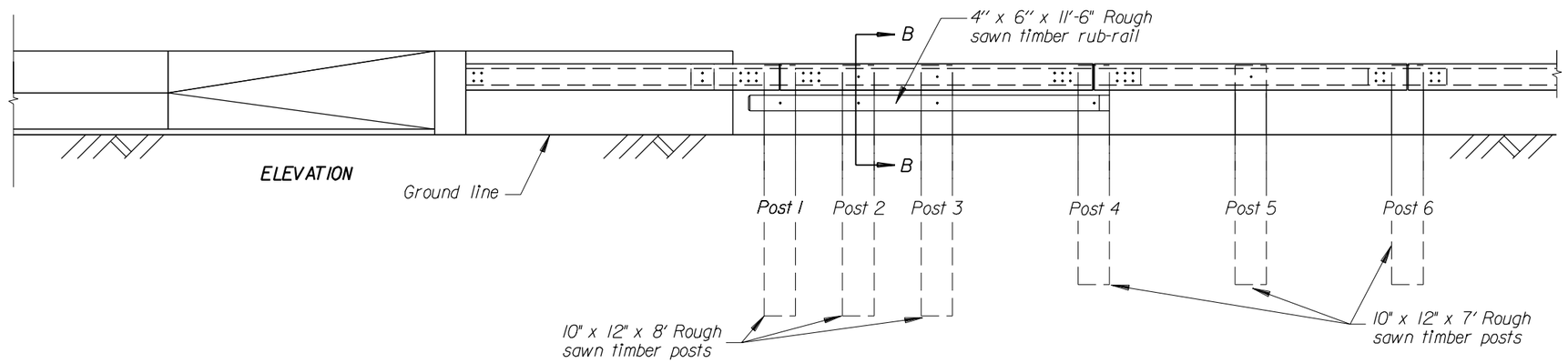

Notes:

1. See STD.617-66 for Sections A-A through C-C, steel rail layouts, and other details.
2. Use weathering steel for all structural steel and fastener hardware.
3. Bolt pattern for steel tube is to match the pattern for the splice plate shown on STD.617-66.
4. For posts 2 and 3 use an 8" x 9" x 12" block for the blockout, and a 5/8" Diameter x 2'-1 1/2" carriage bolt with hex nut and plate washer.

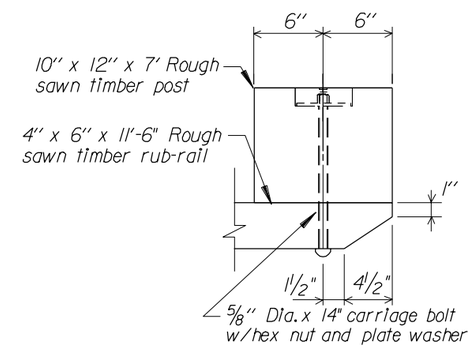

DETAIL C
RUB-RAIL CONNECTION

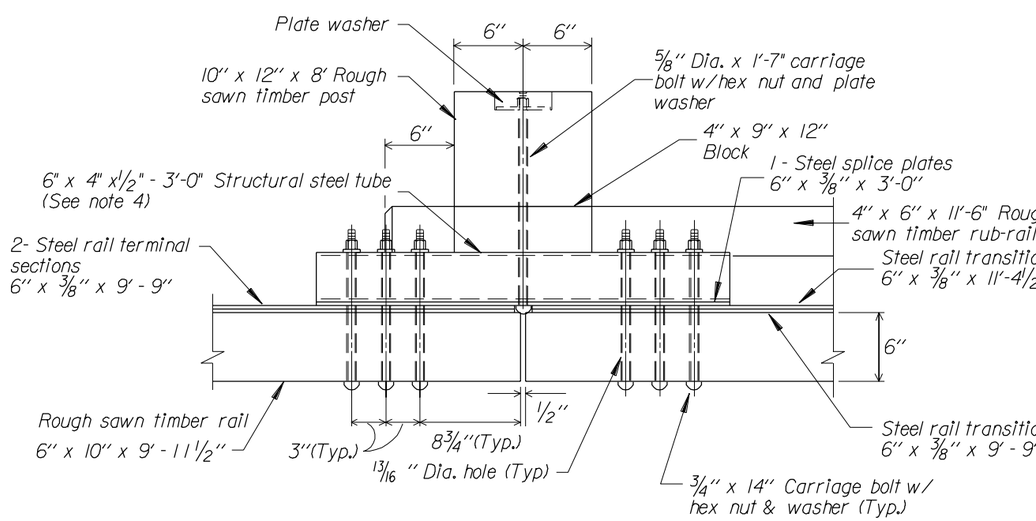

DETAIL A
POST CONNECTION PLAN

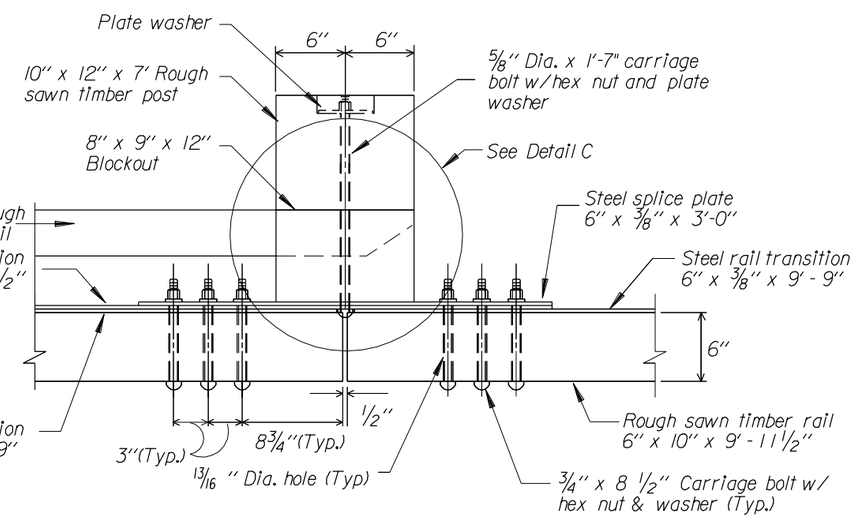

DETAIL B
POST CONNECTION PLAN

Not to scale

REVISIONS			
NO.	DESCRIPTION	BY	DATE
1	Steel transition rail REV.	R.J.S.	11/90
2	Multiple back plates	D.V.G.	12/91
3	Steel tube/schedule 40 pipe	D.V.G.	11/92
4	Increased blockout	D.V.G.	6/93
5	Corrected bolt lengths	D.V.G.	11/93
6	Added Rub-rail	D.V.G.	9/94

U.S. DEPARTMENT OF TRANSPORTATION
FEDERAL HIGHWAY ADMINISTRATION
FEDERAL LANDS HIGHWAY

STANDARD

STEEL-BACKED TIMBER GUARDRAIL BRIDGE CONNECTION

STANDARD APPROVED FOR USE --/----

REVISED:

STANDARD 617-65

02/26/2003 01:03:35 PM M:\Standard\English\std617x65.dgn