| REG | STATE | PROJECT | SHEET NO. |
|---|---|---|---|
| | | | |

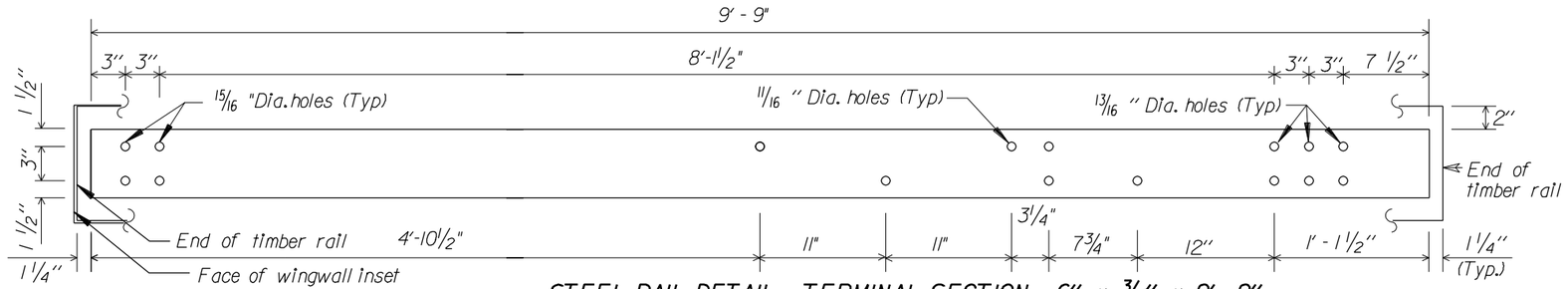


STEEL RAIL DETAIL - TERMINAL SECTION 6" x 3/8" x 9' - 9"

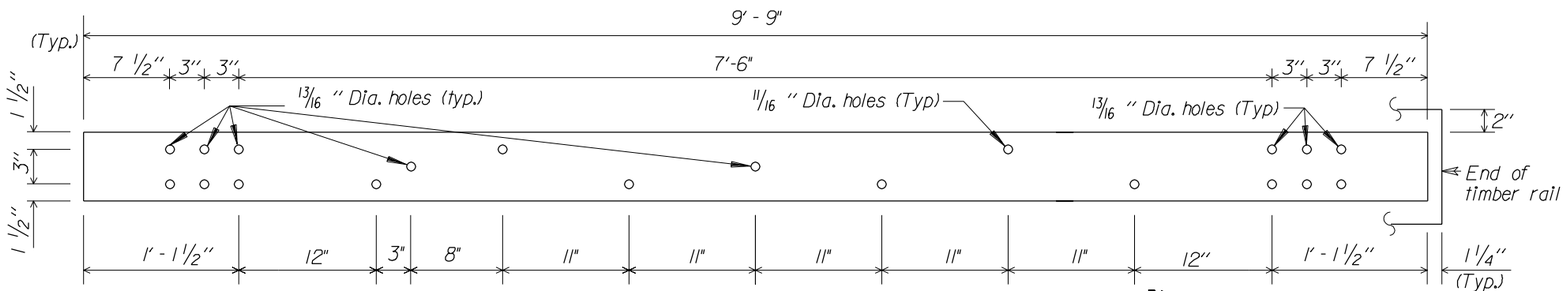


STEEL RAIL DETAIL- TRANSITION SECTION 6" x 3/8" x 9' - 9"

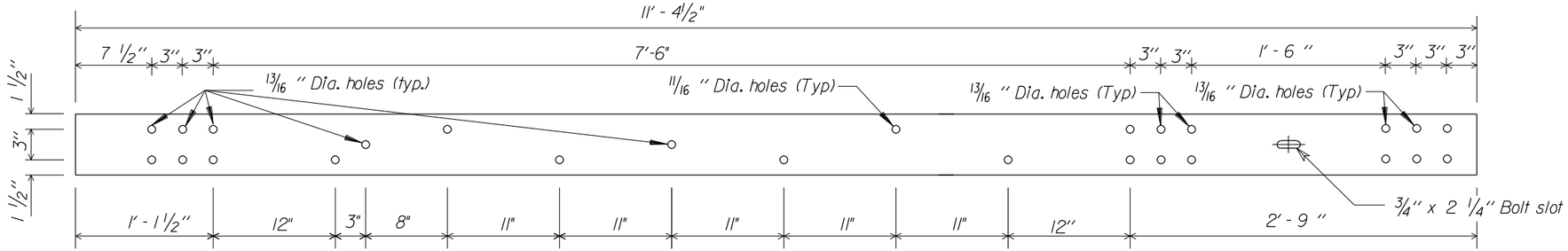


STEEL RAIL DETAIL - TRANSITION SECTION 6" x 3/8" x 11' - 4 1/2"

Notes:

1. Pre-drill 5/8-inch holes in timber rail and 3/8-inch holes in the wood spacer block for the 5/8-inch lag screws.

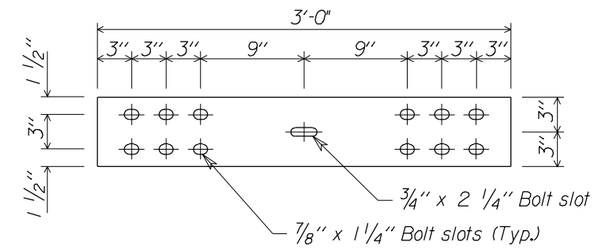


STEEL SPLICE PLATE DETAIL
6" x 3/8" x 3'-0"

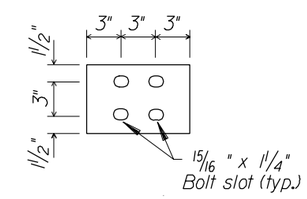


STEEL BEARING PLATE DETAIL
6" x 3/8" x 9"

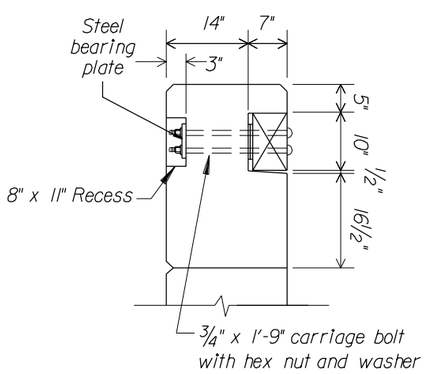


SECTION A-A

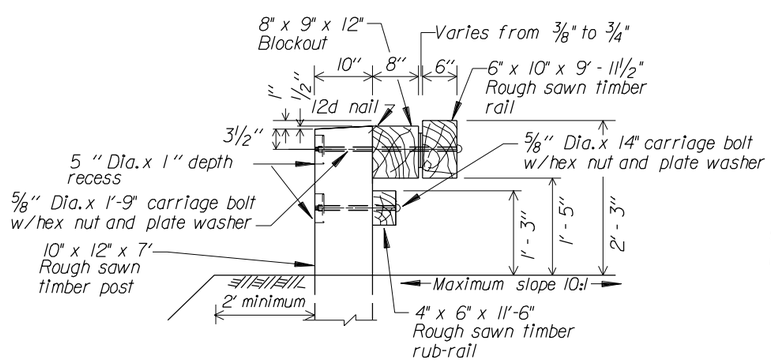


SECTION B-B

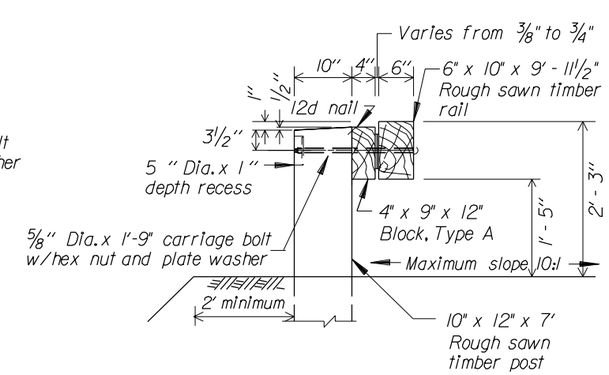


SECTION C-C

Not to scale

| REVISIONS | | | |
|---|---|---|---|
| NO. | DESCRIPTION | BY | DATE |
| 1 | Steel transition rail REV. | R.J.S. | 11/90 |
| 2 | Multiple back plates | D.V.G. | 12/91 |
| 3 | Steel tube/schedule 40 pipe | D.V.G. | 11/92 |
| 4 | Increased blockout | D.V.G. | 6/93 |
| 5 | Corrected bolt lengths | D.V.G. | 11/93 |
| 6 | Added Rub-rail | D.V.G. | 9/94 |

U.S. DEPARTMENT OF TRANSPORTATION
FEDERAL HIGHWAY ADMINISTRATION
FEDERAL LANDS HIGHWAY

STANDARD

# STEEL-BACKED TIMBER GUARDRAIL BRIDGE CONNECTION

STANDARD APPROVED FOR USE --/----

REVISED:

STANDARD
617-66

02/26/2003 01:04:34 PM M:\Standard\English\St617x66.dgn