REG	STATE	PROJECT	SHEET NO.

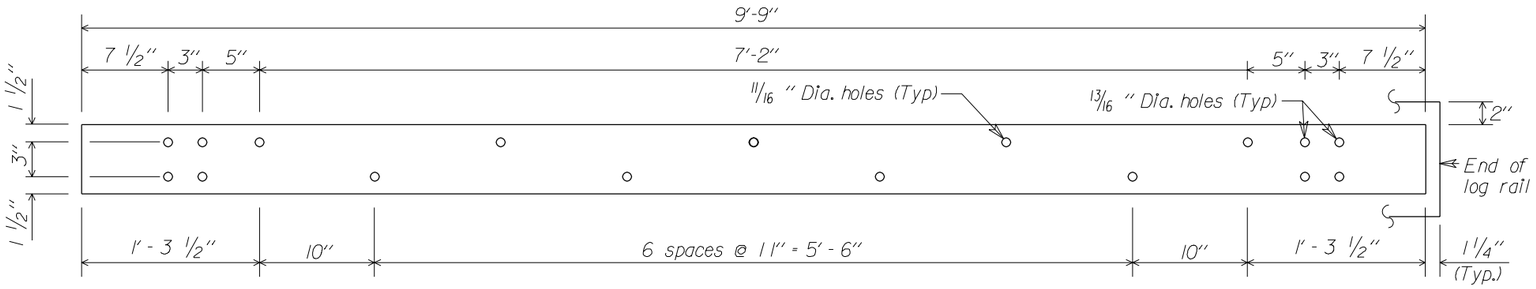

STEEL RAIL DETAIL
6" x 3/8" x 9'-9"

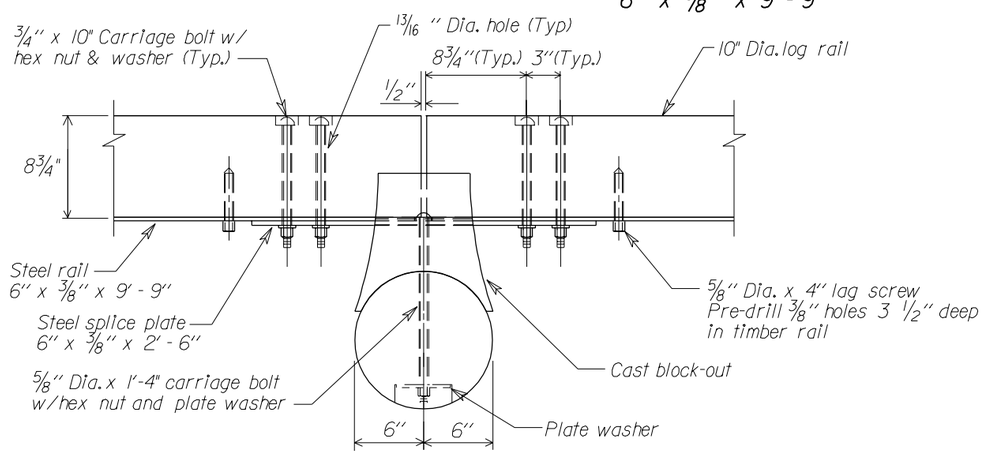

POST CONNECTION PLAN

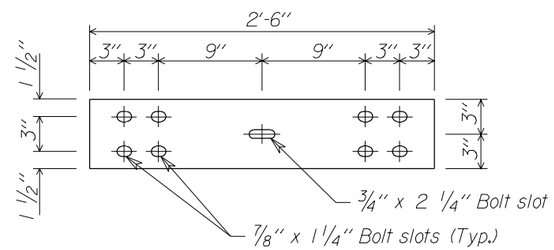

STEEL SPLICE PLATE DETAIL
6" x 3/8" x 2'-6"

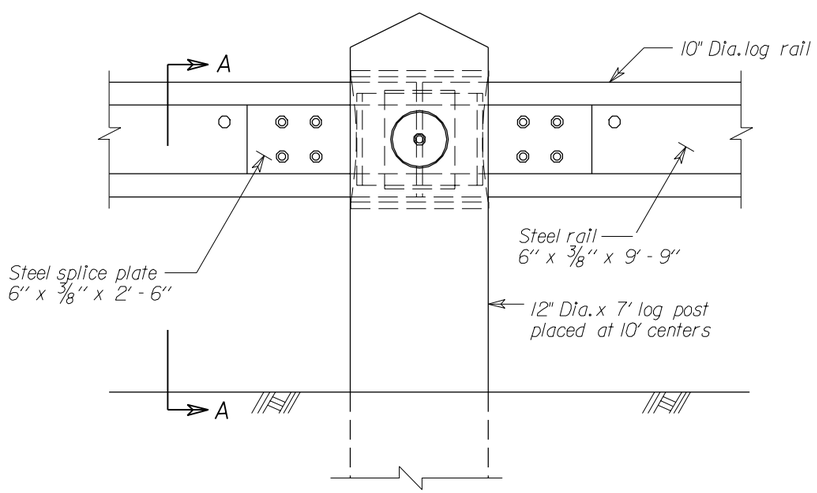

POST CONNECTION ELEVATION

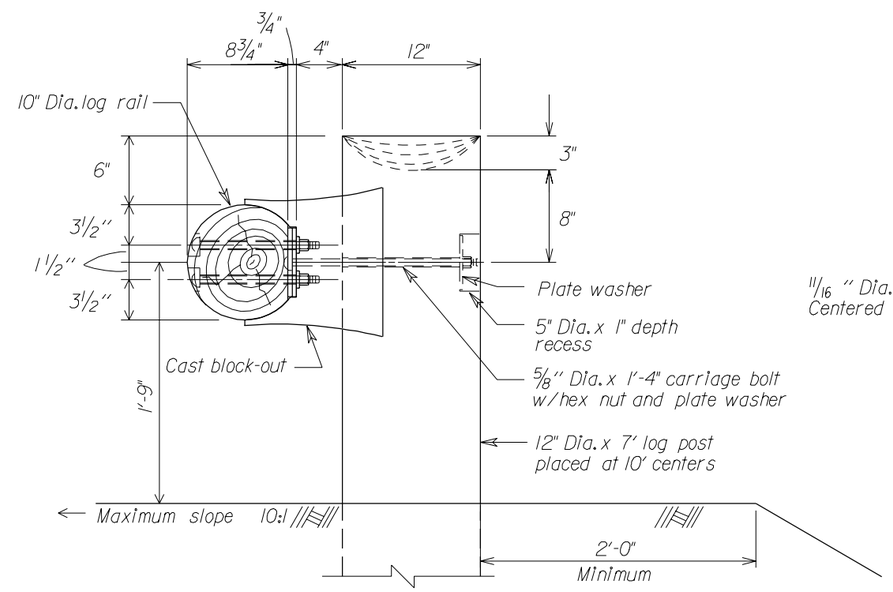

SECTION A-A

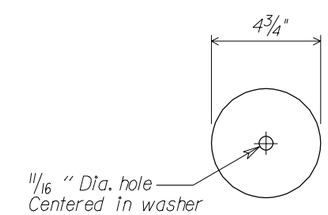

PLATE WASHER DETAIL
4 3/4" Dia. x 1/4"

Notes:

1. For details of the cast block-out and general notes for the Steel-Backed Log Guardrail see Standard 617-81.

DRAFT - NOT FOR USE

No Scale

REVISIONS			
NO.	DESCRIPTION	BY	DATE
1	Revised back plate to 5/8"	D.V.G.	1/93
2	Revised cast block-out	D.V.G.	4/93

U.S. DEPARTMENT OF TRANSPORTATION
FEDERAL HIGHWAY ADMINISTRATION
FEDERAL LANDS HIGHWAY

STANDARD

STEEL-BACKED LOG RAIL

STANDARD APPROVED FOR USE --/----

REVISED:

STANDARD 617-80

02/26/2003 01:05:53 PM M:\Standard\English\std617x80.dgn