REG	STATE	PROJECT	SHEET NO.

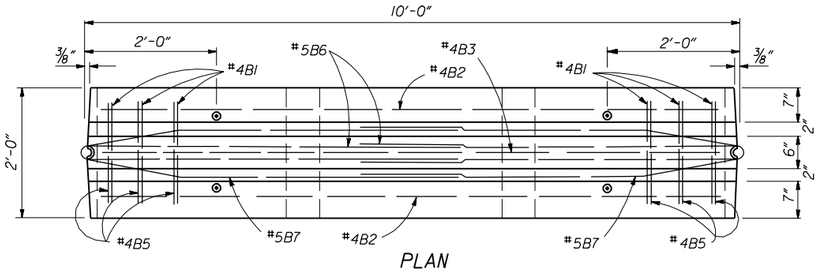

PLAN

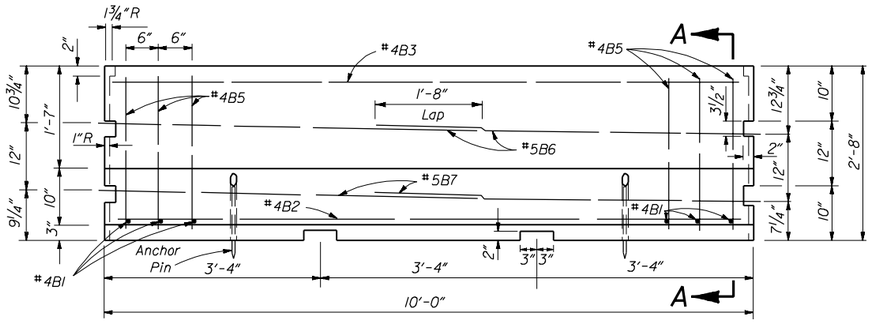

ELEVATION

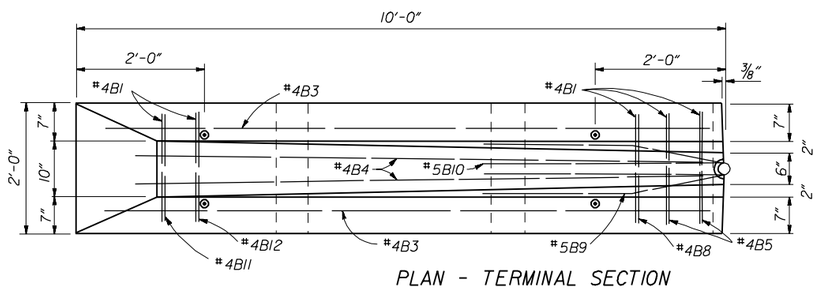

PLAN - TERMINAL SECTION

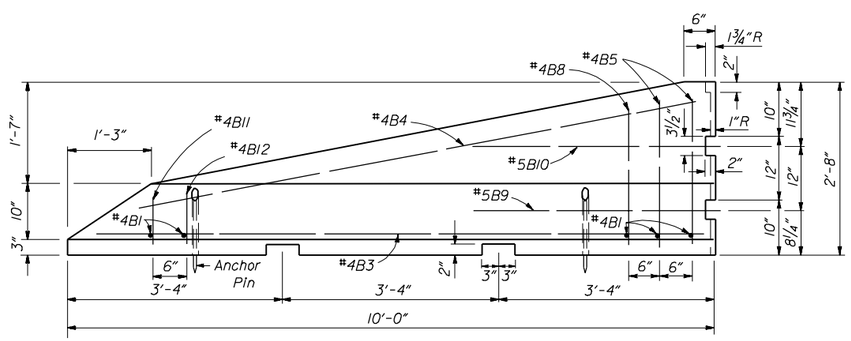

ELEVATION - TERMINAL SECTION

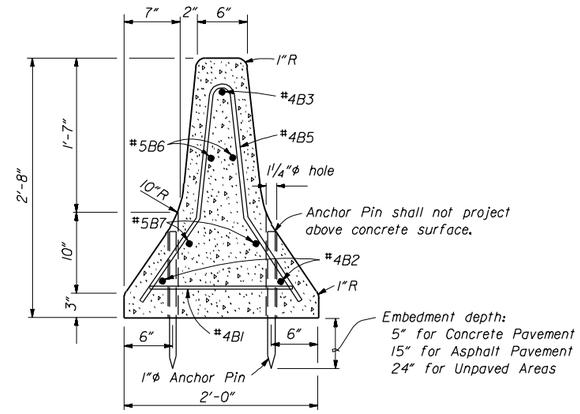

SECTION A-A

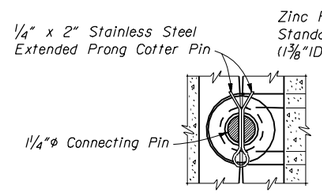

SECTION B-B

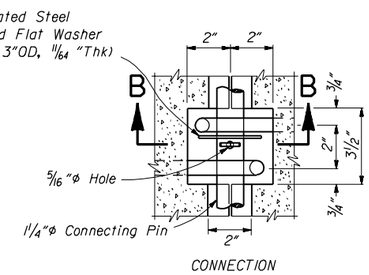

CONNECTION

CONNECTION DETAILS

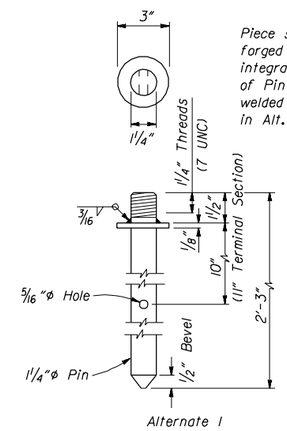

Alternate 1

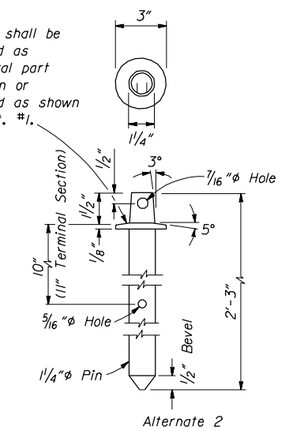

Alternate 2

CONNECTING PIN

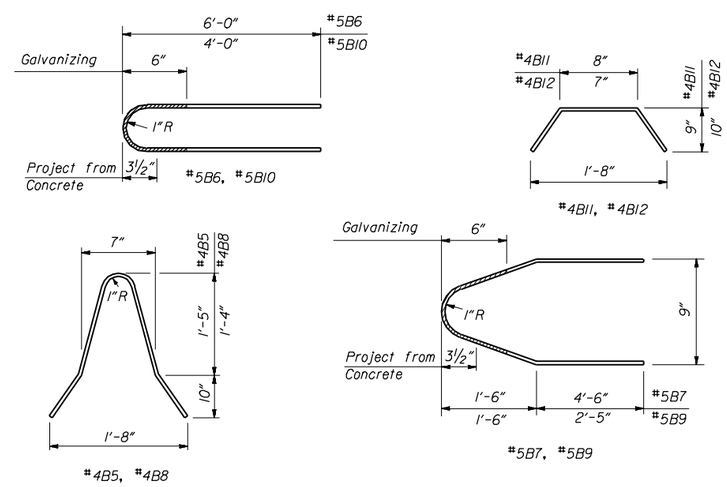

REINFORCING STEEL DETAILS

NOTES:

1. All reinforcing steel shall have a clear cover of 2 inches except as noted.
2. Connecting pin and area shown on reinforcement bars #5B6, #5B7, #5B9, and #5B10 shall be galvanized after fabrication in accordance with AASHTO M232.
3.

NO SCALE

U.S. DEPARTMENT OF TRANSPORTATION
FEDERAL HIGHWAY ADMINISTRATION
FEDERAL LANDS HIGHWAY

STANDARD

CONCRETE BARRIER

STANDARD APPROVED FOR USE --/----

REVISED:

STANDARD 618-1

02/26/2003 01:06:37 PM M:\Standard\English\st618x01.dgn