REG	STATE	PROJECT	SHEET NO.

CATTLE GUARD

REINFORCING STEEL, CONCRETE, STRUCTURAL STEEL, AND GRID UNIT TABLE OF QUANTITIES

	DESCRIPTION	NOMINAL CATTLE GUARD WIDTH																														REMARKS
		12′		14′		16′		18′		20′		22′		24′		26′		28′		30′		32′		34′		36′		38′		40′		42′		
		QUAN.	LGTH.	QUAN.	LGTH.	QUAN.	LGTH.	QUAN.	LGTH.	QUAN.	LGTH.	QUAN.	LGTH.	QUAN.	LGTH.	QUAN.	LGTH.	QUAN.	LGTH.	QUAN.	LGTH.	QUAN.	LGTH.	QUAN.	LGTH.	QUAN.	LGTH.	QUAN.	LGTH.	QUAN.	LGTH.	QUAN.	LGTH.	
	*4 Reinforcing bars, A1	8	90″	8	90″	8	90″	8	90″	8	90″	8	90″	8	90″	8	90″	8	90″	8	90″	8	90″	8	90″	8	90″	8	90″	8	90″	8	90″	
	*4 Reinforcing bars, A2	20	85″	20	85″	20	85″	20	85″	20	85″	20	85″	20	85″	20	85″	20	85″	20	85″	20	85″	20	85″	20	85″	20	85″	20	85″	20	85″	See bar bending detail
	*4 Reinforcing bars, A3	32	105″	36	105″	40	105″	46	105″:	50	105″	54	105″	60	105″	64	105″	70	105″	74	105″	80	105″	84	105″	90	105″	94	105″	98	105″	102	105″	See bar bending detail
	*4 Reinforcing bars, A4	10	154″	10	177″	10	201″	10	224″	10	248″	10	272″	10	295″	10	318″	10	342″	10	366″	100	390″	10	413″	10	437″	10	447″	10	484″	10	508″	
	*4 Reinforcing bars, A5	8	140″	8	163″	8	187″	8	210″	8	234″	8	258″	8	282″	8	305″	8	328″	8	352″	8	376″	8	400″	8	423″	8	460″	8	470″	8	494″	
	Grid unit A (6 ft)	2		1				3		2		1				3		2		5				3		6		1				7		See grid unit list of materials
	Grid unit B (8 ft)			1		2				1		2		3		1		2				4		2				4		5				See grid unit list of materials
	Concrete lateral supports, ft^3	42		42		42		42		42		42		42		42		42		42		42		42		42		42		42		41		
	Concrete end supports, ft^3	108		127		145		163		181		200		218		236		254		272		290		308		326		345		362		381		
	Total concrete, ft^3	150		169		187		205		223		242		260		278		296		314		332		350		368		387		404		421		
*Structural steel, kg	W 8″ x 1″ beams	917		1032		1191		1376		1490		1605		1720		1949		2064		2293		2293		2522		2751		2751		2866		3210		Beams 18 lb/ft
	Rail, ASCE 40	2028		2366		2703		3042		3380		3717		4054		4394		4731		5071		5406		5745		6085		6420		6757		7099		13.28 lb/ft
	Rail, Type I	794		926		1058		1191		1323		1455		1587		1720		1852		1984		2116		2249		2381		2513		2646		2778		Approx. 5.2 lb/ft
	Rail, Type II	1041		1217		1393		1561		1737		1916		2083		2258		2434		2601		2787		2954		3122		3307		3483		3642		6.84 lb/ft
	Reinforcing steel, lb	223		241		260		279		298		316		335		354		373		391		410		429		446		466		485		1087		0.667 lb/ft

* Weights do not include hardware or guard angle.

CATTLE GUARD WING

LIST OF MATERIALS PER WING
(TWO REQUIRED PER INSTALLATION)

PART DESCRIPTION	WOOD WING	ANGLE IRON WING	ALUMINUM TUBING WING
Outside diagonal supports	Two 2″ x 6″ x 83″ treated S4S	Two 2″ x 2″ x 1/4″ x 87″ galvanized steel angle	One 2″ OD x 1/8″ x 165″ aluminum tubing
Middle support	One 2″ x 6″ x 71″ treated S4S	One 2″ x 2″ x 1/4″ x 73″ galvanized steel angle	
Horizontal brace no.1	One 2″ x 6″ x 66″ treated S4S	One 1/2″ x 78″ galvanized steel bar	One 2″ OD x 1/8″ x 72″ aluminum tubing
No. 2	One 2″ x 6″ x 48″ treated S4S	One 1/2″ x 66″ galvanized steel bar	One 2″ OD x 1/8″ x 30″ aluminum tubing
No. 3	One 2″ x 6″ x 18″ treated S4S	One 1/2″ x 54″ galvanized steel bar	None
No. 4	None	One 1/2″ x 39″ galvanized steel bar	None
No. 5	None	One 1/2″ x 24″ galvanized steel bar	None
No. 6	None	One 1/2″ x 9″ galvanized steel bar	None
Post	6″ x 6″ x 95″ treated S4S	One 6″ x 6″ x 83″ treated S4S or approved alternate	One 6″ x 6″ x 95″ treated S4S or approved alternate
Top anchor assembly	Toenail diagonal supports to the post with 5/8″d galvanized nails as required.	*30 x 6″ galvanized hex bolt w/nut and flat washer	*6 x 63″ galvanized steel rod threaded on one end w/nut and washers & 3″ radius hook in other end.
Bottom anchor assembly	2″ x 8″ x 95″ treated S4S sill attached to concrete w/3 each *4 x 7″ hex bolts w/nuts 1/4″ washers embedded in concrete. Toenail diagonal supports to wooden sill w/5/8″d galvanized nails.	3 each *3 x 6″ galvanized hex bolts embeded in concrete. Attach steel L iron to bolt w/flat washer and nut	2 each 1/4″ x 5″ x 10″ flat irons welded to 4″ tubing. 4 each *3 x 6″ galvanized hex bolts embedded in concrete. Attach the flat iron plates to the bolts with washer & nuts.

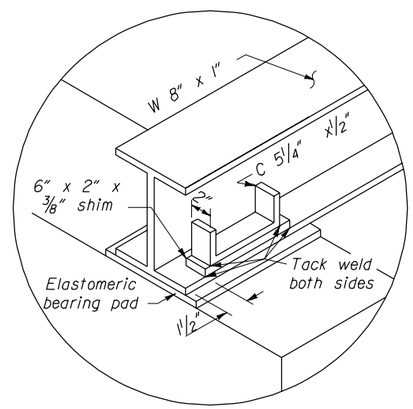

DETAIL A

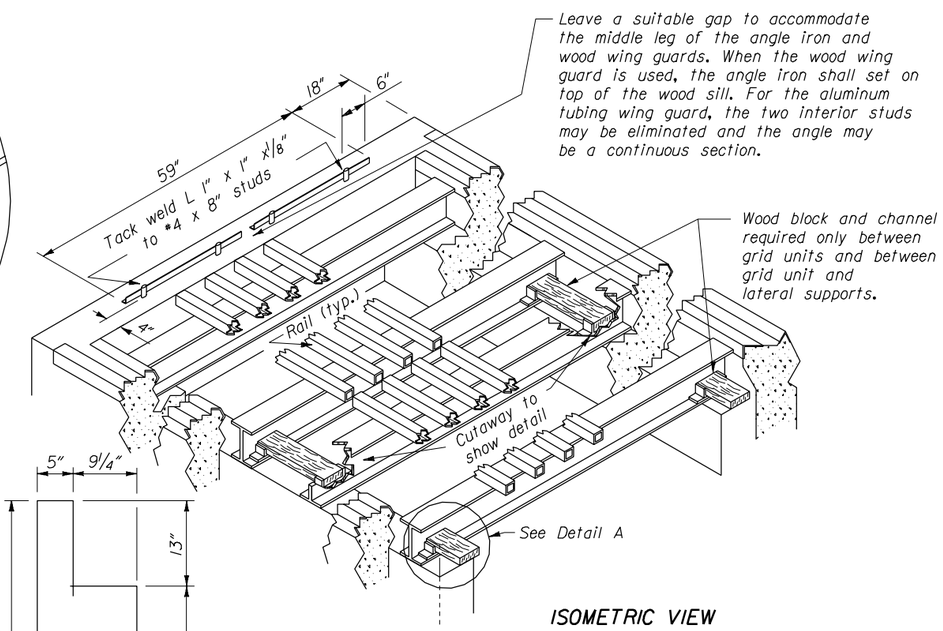

ISOMETRIC VIEW

GRID UNIT LIST OF MATERIALS

GRID UNIT TYPE A

4 each W 8″ x 1″ x 76″ long 13 each ASCE 40 crane rail (with minimum spacing), or 11 tubular cross bar sections, (with minimum spacing), Type I or Type II, 70″

GRID UNIT TYPE B

5 each W 8″ x 1″ x 76″ long 13 each ASCE 40 crane rail (with minimum spacing), or 11 tubular cross bar sections, (with minimum spacing), Type I or Type II, 94″

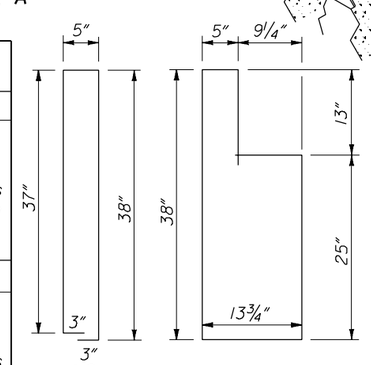

BAR BENDING DETAIL

NO SCALE

U.S. DEPARTMENT OF TRANSPORTATION
FEDERAL HIGHWAY ADMINISTRATION
FEDERAL LANDS HIGHWAY

STANDARD

CATTLE GUARD

STANDARD APPROVED FOR USE --/----

REVISED:

STANDARD 619-2

02/26/2003 01:08:19 PM M:\Standard\English\st619x02.dgn