REG	STATE	PROJECT	SHEET NO.

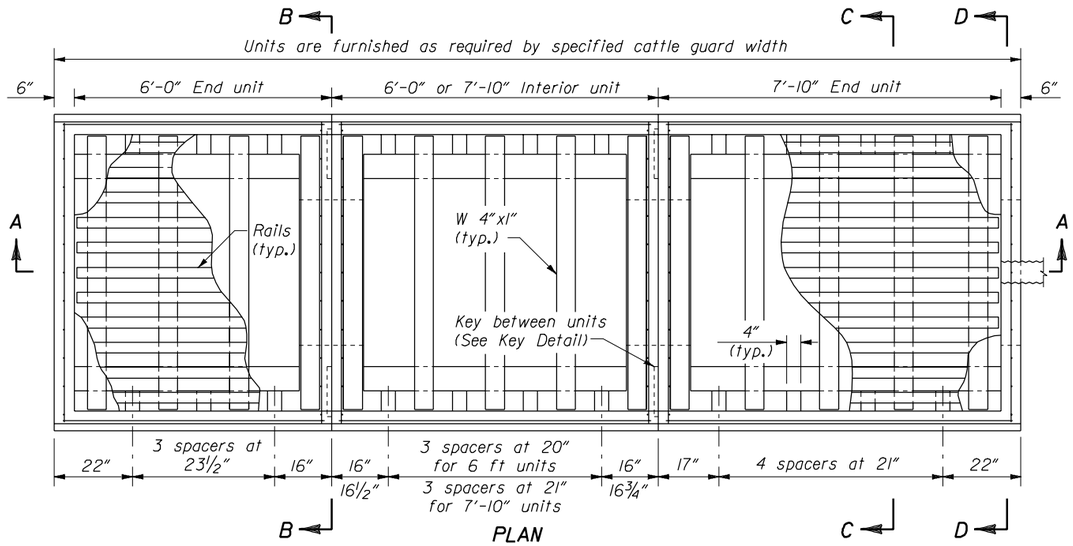

PLAN

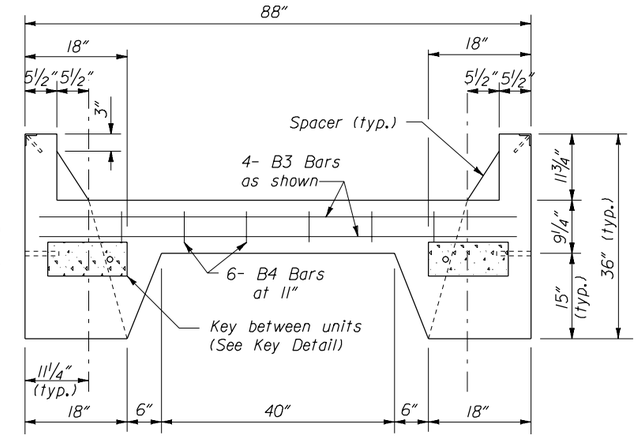

SECTION B-B

NOTES:

1. See Standard 619-1 for reinforcing steel size and grade.
2. See Standard 619-2 for cattle guard wing details. Fabricate end units to accommodate selected cattle guard wing.
3. Minimum soil bearing 13079 lb/ft^2. Place units in fine aggregate bed 3" thick over hand leveled soil compacted to not less than 95 percent density.
4. Chamfer exposed concrete edges ¾" unless otherwise shown. Give all concrete surfaces a Class 1 finish.
5. Approved alternate designs may be used.

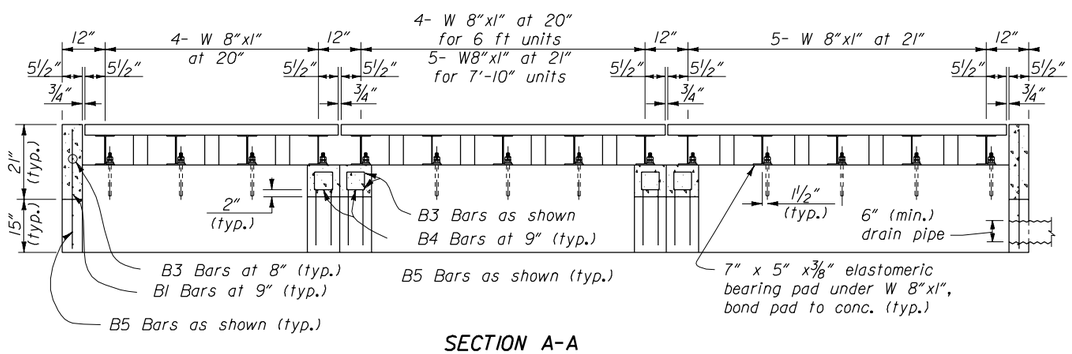

SECTION A-A

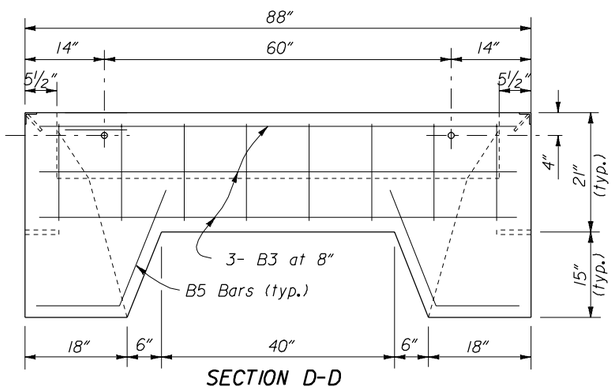

SECTION D-D

PRECAST CATTLE GUARD					
REINFORCING STEEL AND CONCRETE					
UNIT	No. of BARS	BAR MARK	LENGTH	MASS lb	CONCRETE ft^3
5'-3" END	7	B3	83"	25.4	43.4
	10	B2	73"	32.0	
	8	B1	17"	10.4	
	6	B4	7"	6.8	
	18	B6	31"	31.1	
	6	B5	35"	9.3	
5'-3" INTERIOR	8	B3	83"	29.1	35.3
	10	B2	65"	28.7	
	12	B4	26"	13.4	
	18	B6	69"	54.5	
	8	B5	35"	12.6	
7'-10" INTERIOR	8	B3	83"	29.1	46.6
	10	B2	89"	39.0	
	12	B4	26"	13.5	
	20	B6	69"	60.6	
	8	B5	35"	12.6	
7'-10" END	7	B3	83"	25.4	55.1
	10	B2	97"	42.3	
	8	B1	17"	10.4	
	6	B4	26"	6.8	
	20	B6	69"	60.6	
	6	B5	35"	9.3	

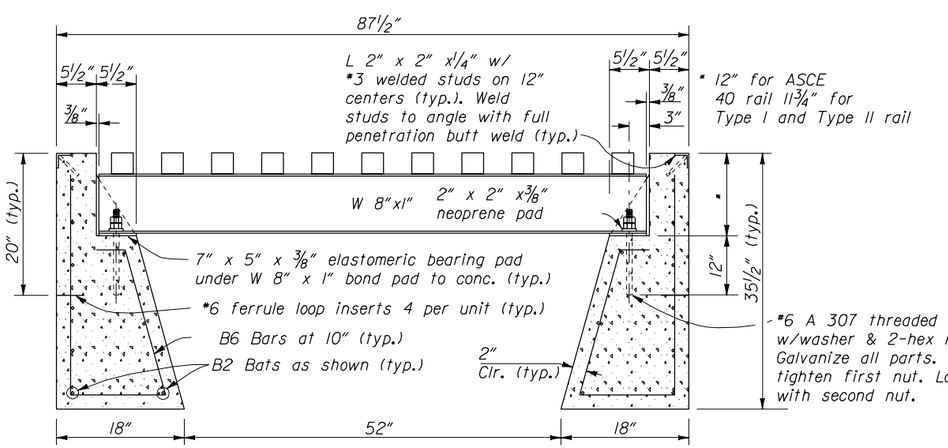

SECTION C-C

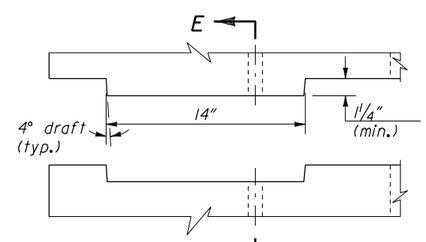

PLAN

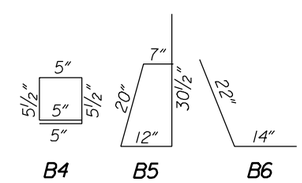

BAR BENDING DETAIL

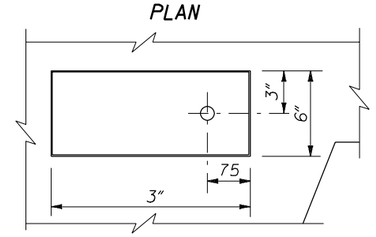

ELEVATION

KEY DETAIL

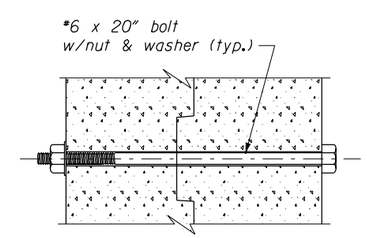

SECTION E-E

NO SCALE

U.S. DEPARTMENT OF TRANSPORTATION
FEDERAL HIGHWAY ADMINISTRATION
FEDERAL LANDS HIGHWAY

STANDARD

CATTLE GUARD PRECAST FOUNDATION

STANDARD APPROVED FOR USE --/----

REVISED:

STANDARD 619-3

02/26/2003 01:08:44 PM M:\Standard\English\std619x03.dgn