Heartland Corridor, Walton Virginia to Columbus Ohio

Preliminary Engineering Phase Report

BIG FOUR
NO. 1
TUNNEL –
MP N394.24
BIG FOUR, WV

October 14, 2005, Rev. 2

Hatch Mott MacDonald

Hatch Mott MacDonald

Preliminary Engineering Phase Report

October 14, 2005

Norfolk Southern Railway
Heartland Corridor, Walton VA to Columbus OH

Big Four No. 1 Tunnel – MP N-394.24

Statistics: Pocahontas Division
Double-width Tunnel for Main #1 & Main #2
Length = 645'
Concrete lined
Degree of curvature = 4.9 Left (per Track Chart)
Superelevation = 2.5" (per Track Chart)

1. EXISTING CONDITIONS 2

2. CLEARANCE IMPROVEMENT ALTERNATIVES 4

3. PREFERRED ALTERNATIVE 4

4. USGS TOPOGRAPHIC MAP 8

5. AERIAL PHOTO 9

6. TRACK CHART 10

7. PHOTOS 11

8. ESTIMATE 14

9. DRAWINGS 14

Existing Tunnel Clearance Cross Sections

Proposed Tunnel Clearance Cross Sections

Plan and Profile

Valuation Map

1. EXISTING CONDITIONS

1.1 Background

Valuation Map V-13WV/22 (16278) for the Big Four No. 1 Tunnel is dated June 30, 1916. Parcels for the tunnel were acquired in 1907. It is therefore suspected that the tunnel was constructed in 1907 or shortly afterwards. Additional information on this tunnel was obtained from various sources such as topographic maps, aerial photos, inspection reports, track charts, and field investigations that were performed on March 15 and June 13, 2005.

1.2 General Area

The tunnel is located in a sparsely populated area with good access to the east and west portals. The east portal is located behind a shopping center building with good access from US Rt. 52. There is a potential staging area here and good access for getting equipment onto the track and into the tunnel. There is a small tributary creek and culvert about 100' east of the east portal. There is a railroad access road that is accessible from Rt. 52 that leads to the west portal and some more open space and good access to the tunnel. There are no siding tracks in the vicinity of this tunnel. Besides the retail building (a former K-Mart, future Wal-Mart) there are few nearby buildings and most of the area around the tunnel is rocky, hilly, and wooded.

1.3 Structural Conditions

The tunnel is 645' long with a concrete lining and a nominal width of 30'. It is a double-width tunnel for two tracks. A signals and communications cable is mounted on the north wall. The liner is typically dry, even at construction joints, except for near each portal, where there is some minor leaking. There are typical minor spalls and small cracks in each segment of the liner. The concrete liner is in generally good condition.

Ballast covers the top of the liner footing on the right side, however the top of footing is exposed on the left side for the entire length of the tunnel. A small portion of the tunnel invert material was excavated to fully expose the base of the tunnel liner footing. The footing thickness was found to be 18". The vertical distance from the top of rail to the base of the footing was measured at 52".

1.4 Track

The track is continuously welded rail of conventional design with wooden crossties at approximately 19" and a stone ballast section. The ballast is generally clean, but somewhat uneven with the ties, especially on Main #1. The rail is typically 132RE or 141RE. The track is curved at 4.9 degrees to the left for the entire length of the tunnel. The water in the tunnel was tested and its pH reading was 7.02. This is a fairly neutral reading and indicates that the water is not unusually corrosive.

1.5 Geotechnical

The tunnels in the eastern part of the Pocahontas Division (including Big Four No. 1) are located in the Appalachian Plateaus Physiographic Province, a region characterized by deeply incised plateaus underlain by flat-lying sedimentary rock. The tunnels themselves are lined and no rock was exposed. The description of the site geology at each tunnel is based on our observations of the rockmass at the portals and adjacent cuts and the 1968 *West Virginia Geologic* Map prepared by the West Virginia Geologic and Economic Survey.

The Big Four No. 1 Tunnel was excavated through medium- to thick-bedded sandstone of the Pocahontas Formation. Minor interbeds of shale, siltstone, and coal may also be present in this formation, but were not observed in the exposures. Bedding is sub-horizontal.

The West Virginia geological survey website indicates that there is a mine entrance about 4000' northeast of the Big Four No. 1 Tunnel. Mine maps indicate that the mine may extend underneath the tunnel, at an elevation of about 20 to 40 feet below the invert of the tunnel.

The initial geoprobes, taken in March 2005, indicated that the top of rock is located between 1.5' to 5.0' (averaging about 3.7') below the top of ballast throughout the tunnel for Main #1 and between 2.0' to 5.0' (averaging about 4.2') below the top of ballast throughout the tunnel for Main #2. Except for 100' in the middle of the tunnel where top of rock appears to be between only 1.5' to 3.0' below top ballast, the rest of the tunnel has between 4.0' and 5.0' to top of rock. Top of ballast is typically about 0.8' below top of rail. Additional geoprobes in the middle of the tunnel were taken in June 2005. The additional probes were taken approximately 50' away from each of the initial probe locations, and the additional probes did not meet refusal until a depth of 5.0'.

1.6 Clearances

The laser car measurements indicate that the existing tunnel has adequate horizontal clearances for the composite design template but that the vertical clearance is deficient by an average of about 14" (varies from 6"- 22".) The template encroaches the tunnel lining 10-11 o'clock and 1-2 o'clock positions. Cross sections of the tunnel clearance encroachments are shown in the drawings at the end of this report. The maximum vertical encroachments are summarized in the table below:

	Crown Encroachment (radial inches)	
Distance (ft) from East Portal	**Left Side**	**Right Side**
0	13	21
101	20	12
201	15	16

	Crown Encroachment (radial inches)	
Distance (ft) from East Portal	**Left Side**	**Right Side**
301	10	15
402	14	18
501	23	18
551	22	19

2. CLEARANCE IMPROVEMENT ALTERNATIVES

Given the magnitude of the vertical clearance deficiency, there are several general alternatives that can be used to obtain the clearance; replacing the lining, notching the lining, or lowering the track. Combinations of the general methods may be required to obtain a design that is cost effective and that can be constructed within reasonable track outages.

2.1 Liner Replacement

To obtain the desired clearance, the concrete liner must be demolished, the native rock excavated to the clearance limits plus the new liner thickness, and a new concrete liner installed. Assuming a 26” thick crown, this method would be required for approximately two-thirds of the tunnel if a more cost effective method is not feasible.

2.2 Notching the Crown

Notching in the upper quadrants of the tunnel may not cut entirely through the liner and could be an alternative to complete liner replacement. Considering that the average encroachment is 14”, rock bolts and a deep notching scheme will be necessary in through approximately one-third of the tunnel.

2.3 Track Lowering/Undercutting

Based on the two sets of geoprobe data taken, lowering the track is a feasible alternative. Rock may be encountered at an elevation of less than 2.5’ below top of rail at some localized spots in the middle portion of the tunnel. However, more than 75% of the tunnel appears to have more than 4.0’ to the top of rock. With the vertical distance from the top of rail to the base of the footing being 52”, underpinning of the liner footing with this alternative not a major concern. This alternative is less expensive than the liner modification alternatives.

3. PREFERRED ALTERNATIVE

The clearance can be best accomplished using the Track Undercutting methodology.

There are no significant impediments to the undercutting procedure, although the mine beneath the tunnel should be located precisely in the final design phase. Encountering rock close to the surface at some points in the middle of the tunnel may slow down the process, however, this alternative will remain the most cost effective method to achieve clearance.

3.1 Preliminary Design

The preliminary design combines undercutting and track shifting.

3.1.1 Horizontal Geometry

The track shift will require shifting 2,642' of the existing track southward up to 1'–6". The track shift places the centerline of the tracks approximately parallel with the centerline of the tunnel crown. The actual limiting clearance is at the 11 and 1 o'clock positions on Track 1 and 2 respectively and is approximately 20'-6". This clearance would limit the amount of future maintenance in the tunnel.

The new curvature in the tunnel is a 5° 00' 00" curve to the right. The track chart indicates that there is a permanent speed restriction on the curve east of the tunnel and a timetable speed in the tunnel of 35 mph and that the curve has 2.5" of superelevation. The new curve can achieve the 35 mph speed with 2.5" of superelevation at an under-balance of 2.0".

The spirals are sized to provide a minimum elevation runoff of ½" per 31', or a minimum length of 155'. The shortest spiral is at the east tunnel portal. The spiral is 164' long and exceeds the minimum length.

The track shift ties to the existing left hand curve on the east end, and into the existing left hand curve west of the tunnel.

3.1.2 Vertical Alignment

The proposed undercutting operation was designed to restore a uniform track profile through the tunnel that parallels the crown of the tunnel. The proposed profile also extends the vertical tangent beyond the portals of the tunnels a minimum of 100' (117' at the east portal). The extended vertical tangent serves two purposes: to provide a uniform grade of at least 1 car length outside of the tunnel to allow any car bounce to dampen, and to provide space for running out future track surfacing without affecting the clearance at the tunnel. Since there is a -0.33% grade through the tunnel, the western vertical alignment merely extended the vertical tangent from the tunnel to a point where a single crest vertical curve is used to connect to the existing profile.

The vertical tangents are connected by vertical curves based on the new AREMA procedures. The new procedures do not use different rates of changes for crest and sag curves, resulting in vertical curves of similar lengths. All of the vertical curves exceed the minimum recommended lengths.

The undercutter is assumed to have air dump cars fitted with a conveyor system to remove the spoil from the tunnel. The material outside of the tunnel can be cast to the side, however proper grading is essential to prevent the material from being washed into the new tack structure.

3.1.3 Other Construction

Proper drainage is vital to maintaining the track structure. A new trench drain is proposed in the tunnel. This drain will carry any water in the tunnel out to surface drainage along the tracks.

Lowering the track will place it below the existing ground surface. To allow drainage from beneath the track structure, the ground surface adjacent to the track must be excavated to provide new longitudinal ditches along the track. Likewise, the existing material on the tunnel invert must be lowered to the bottom of the ballast section and sloped to the trench drain.

3.2 Schedule

The estimated schedule for completing improvements on this tunnel is five (5) weeks from mobilization to demobilization.

3.2.1 Proposed Construction Phasing

Phase I

The trench drain will be installed in the tunnel under the first phase of construction. Constructing the trench drain first will allow the work to take place on the existing right of way road without fouling the existing track with the equipment. The site grading will also be done in the first phase. Excavating at this time will reduce the potential for fouling the new ballast during the excavation.

All of the Phase I work can be accomplished under daily track windows.

Phase II

The track will be shifted to its new alignment in preparation for undercutting. The track will then be undercut, ballasted, and surfaced. The turnout will be replaced with conventional track panels to allow a continuous undercutting operation. At the completion of the under cutting the turnout will be installed in its final location.

Phase II will require shutting down the track while the track is shifted, undercut, and surfaced. Five 10 hour days are anticipated to accomplish this work. Working multiple shifts and having the undercutter working overnight after the track swings could reduce this duration.

Phase III

After the final site grading to remove the material under and adjacent to the original alignment, the track is re-welded and equalized in this phase. The grade crossings are also installed in this phase after the rail is welded and equalized.

All of the Phase III work can be accomplished under daily track windows.

3.3 Estimate

The total estimated cost for achieving clearance at this location is $1.34 million (2005 rates) or $2,079 per foot of double track tunnel. The work items include mobilization, surveying, track lowering, track shifting, rock cut for drainage trench, tunnel drainage system, and demobilization. The total cost is made up of tunnel, track, signal, and site work items at $901,000, plus a 20% construction contingency, a 10% engineering allowance, and a 14% construction management allowance.

4. USGS TOPOGRAPHIC MAP

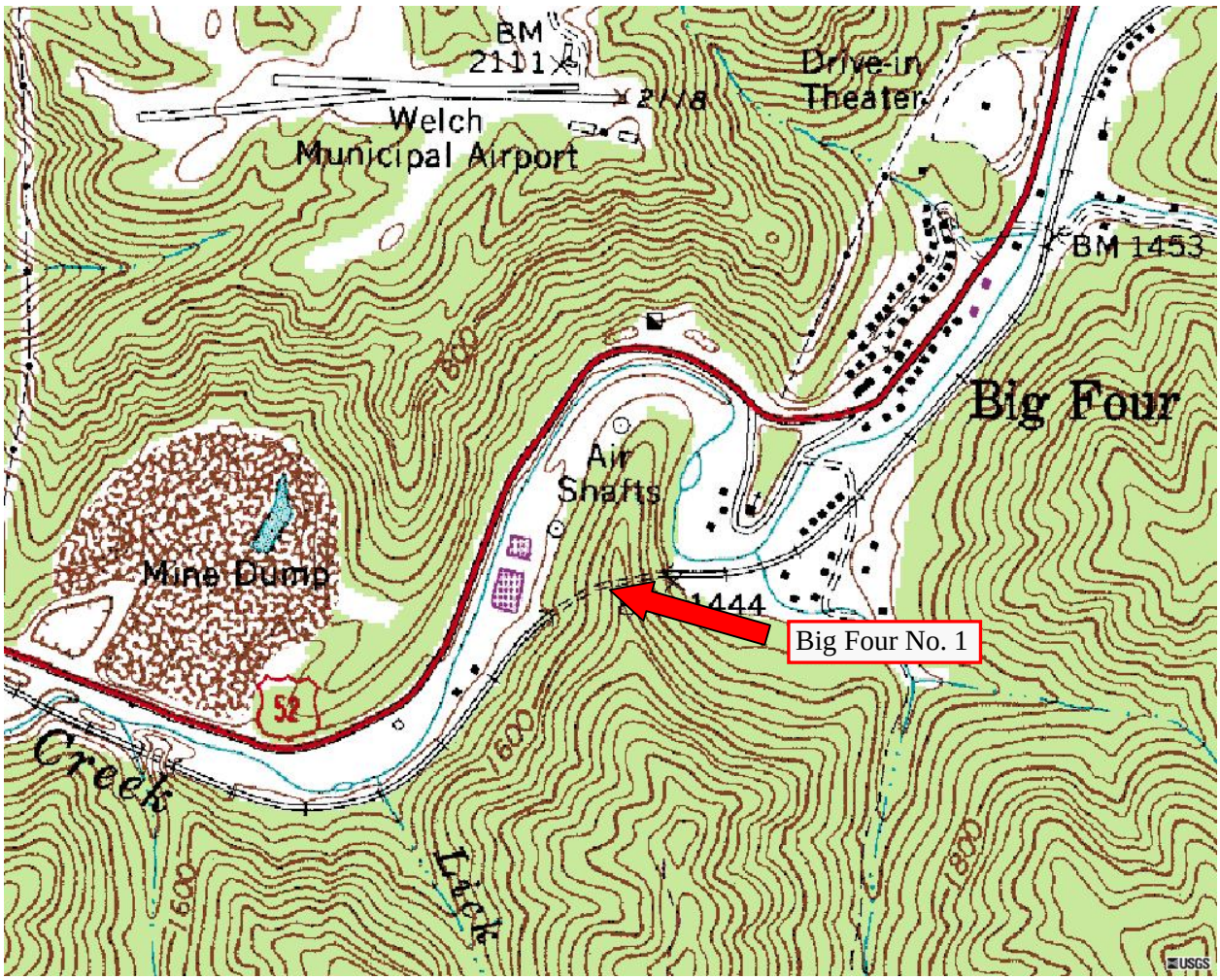

5. AERIAL PHOTO

6. TRACK CHART

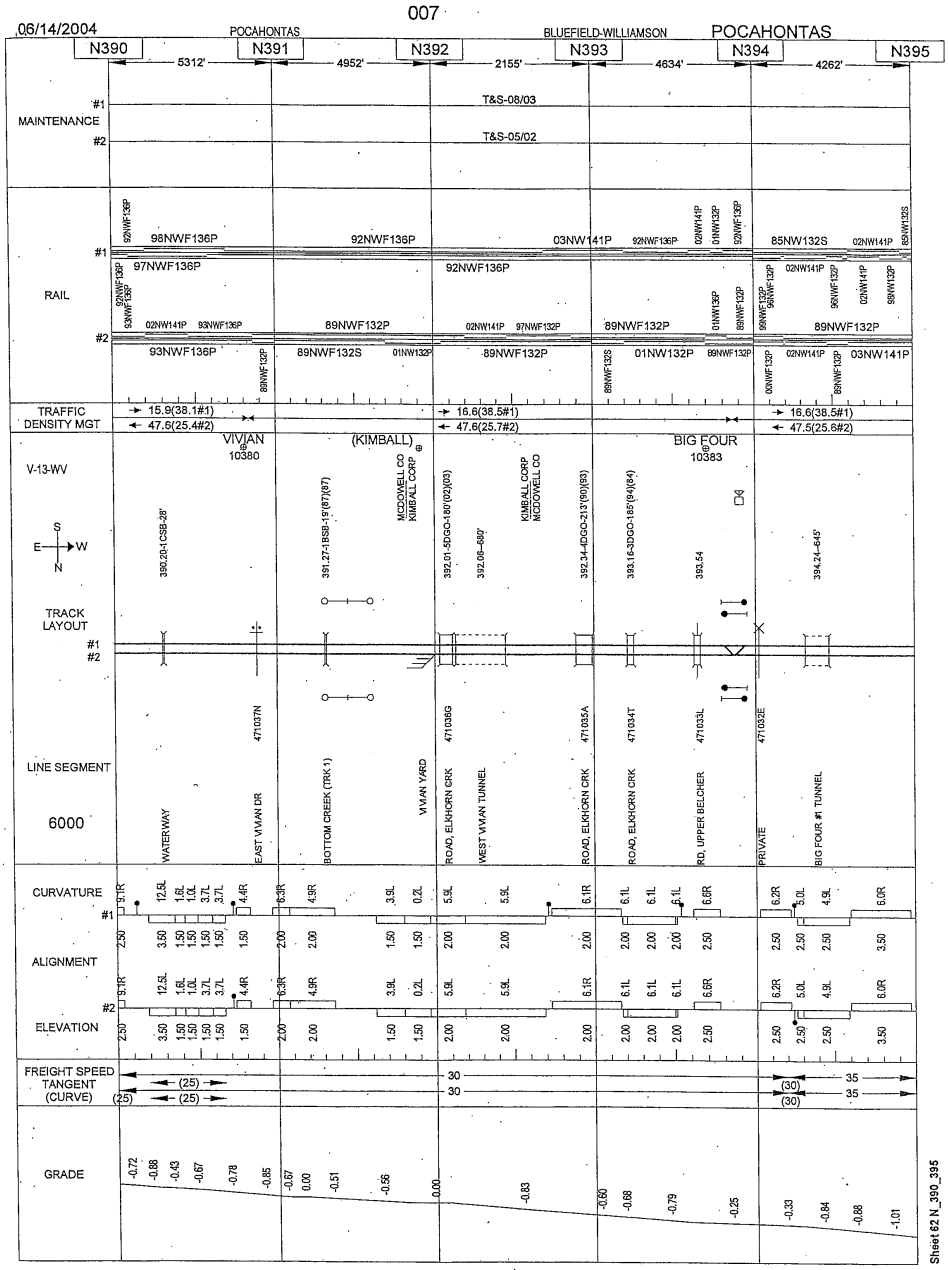

7. PHOTOS

Photo 1. East portal

Photo 2. Looking east of tunnel

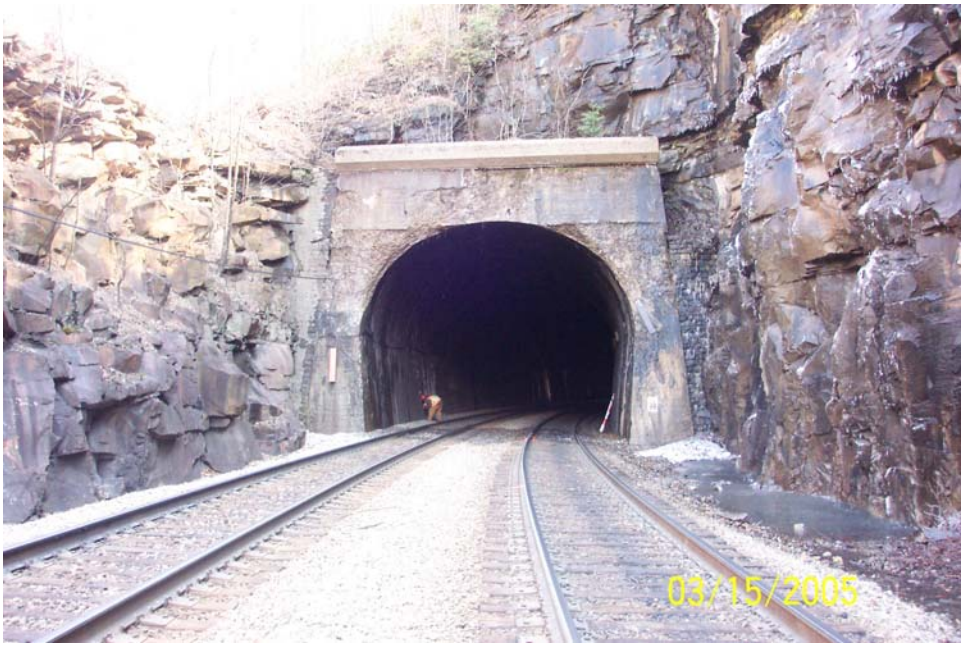

Photo 3. West portal

Photo 4. Looking west of tunnel

Photo 5. Looking into tunnel from near east portal. Note exposed top of footing on left wall.

Photo 6. Looking into tunnel from near east portal. Walls and track are wet at first construction joint.

8. ESTIMATE

Big Four No. 1

Tunnel Length	645	ft
Tunnel Width	30	ft
# of Tracks	2	

	Contractor		Railroad	
Work Window	10	hrs	10	hrs
Setup & Demobilization Allowance	2	hrs	2	hrs
Production Time	8	hrs	8	hrs

Tunnel Work Items	UOM	Quantity	Unit Rate	Total
Mobilization	%	5%		$4,198.91
Rock Cut Drainage Trench	LF	745	$90.36	$67,315.20
Tunnel Drainage	LF	745	$17.96	$13,379.76
Demobilization	DY	1	$3,283.20	$3,283.20
Total Tunnel Work Items	**LF**	**645**	**$136.71**	**$88,177.06**

Trackwork Items	UOM	Quantity	Unit Rate	Total
Mobilization	DY	1	$3,110.32	$3,110.32
Surveying	DY	2	$1,300.00	$2,600.00
Track Preparation/Restoration	DY	2	$3,431.32	$6,862.64
Undercutting	PF	17000	$15.31	$260,297.20
Install Steel Ties	EA			
Track Shift < 8' & > 1'	TF	4000	$6.75	$26,980.68
Track Shift > 8'	TF			
New Track	TF			
Saw Cuts	EA	16	$5,719.72	$91,515.53
Panel Track	TF			
Remove Track	TF			
Field Welds	EA	16	$2,523.78	$40,380.50
Surfacing & Lining	PF	20000	$1.80	$36,064.22
Ballasting Track	TN	5000	$37.29	$186,462.64
Equalizing rail	DY	2	$6,701.14	$13,402.28
Elastomeric Flangeway Crossing	EA			
Demobilization	DY			
Total Trackwork Items				**$667,676.01**

Signal Items	UOM	Quantity	Unit Rate	Total
Mobilization	DY			
Relocate Cables / Track Leads	LF	1300	$11.51	$14,967.78
Cut-in	EA			
New CP	EA			
Modify CP	EA			
Grade Crossing - Single to Double Track	EA			
Signal Location Modification	EA			
New Cut Section	EA			
Demobilization	DY			
Total Signal Items				**$14,967.78**

Site Items	UOM	Quantity	Unit Rate	Total
Mobilization	DY	1	$2,483.60	$2,483.60
Erosion & Sedimentation Control	EA	1	$11,958.80	$11,958.80
Site Grading	CY	4800	$20.52	$98,486.68
Rock Excavation	CY			
Sub-Ballast	CY			
Drainage	LF			
Demobilization	DY			
Total Site Items				**$112,929.08**

Special Items	UOM	Quantity	Unit Rate	Total
Mobilization	DY			
Flagging	DY	21	$821.50	$17,251.50
Flood Track with Ballast for Protection	TN			
Remove Flooded Ballast	TN			
Temporary Bridges	EA			
New Railroad Bridges	EA			
New Highway Bridges	EA			
Invert/Crown Void Grouting	DY			
Demobilization	DY			
Total Specialty Items				**$17,251.50**

Subtotal All Items		**$901,001.43**
Construction Contingency	**20%**	**$180,200.29**
Engineering Allowance	**10%**	**$108,120.17**
Construction Management Allowance	**14%**	**$151,368.24**
Total		**$1,340,690.13**

9. DRAWINGS

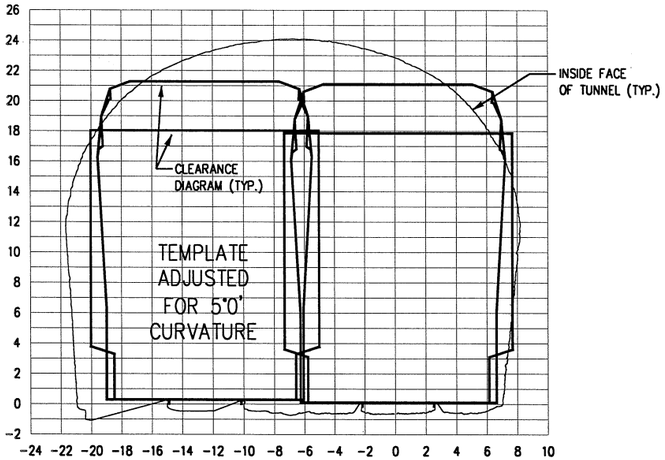

0+00

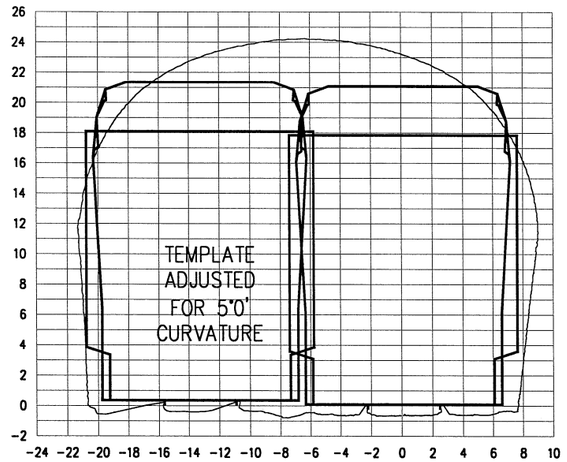

1+01

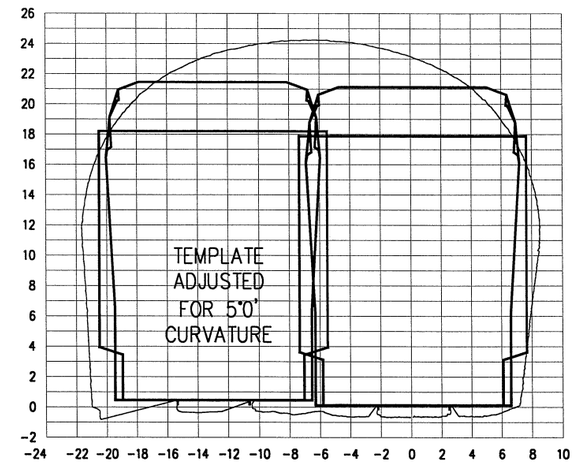

2+01

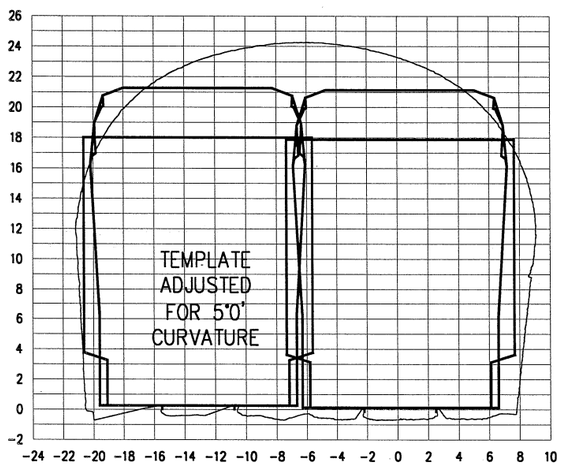

0+51

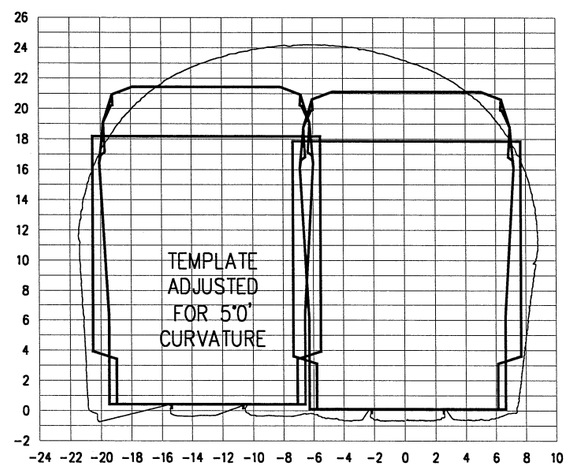

1+51

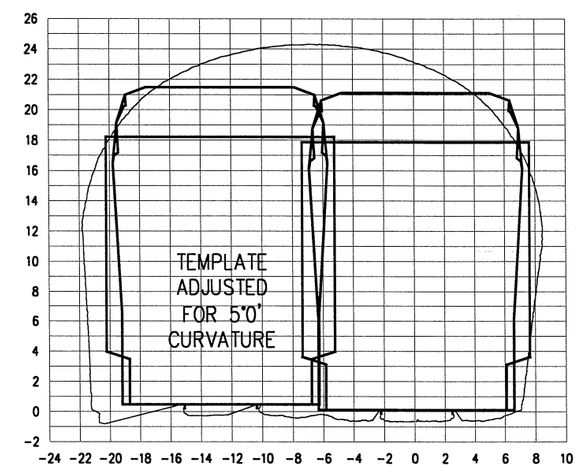

2+51

NOTES:

1. HORIZONTAL DATUM IS PARALLEL TO TRACK. WHERE TRACK IS SUPERELEVATED, DATUM IS NOT PARALLEL WITH GROUND.
2. CROSS SECTION GIVEN FOR STA. 0+00 IS A COMPOSITE FOR THE TUNNEL FROM STA. 0+00 THROUGH 0+50. ALL OF THE SECTIONS FOLLOW THIS CONVENTION.

NOT FOR CONSTRUCTION

SCALE: 1" = 100'

50 0 100 200 300

Hatch Mott MacDonald

NORFOLK SOUTHERN

OWNING COMPANY
POCAHONTAS
OPERATING DIVISION
OFFICE OF THE CHIEF ENGINEER - DESIGN AND CONSTRUCTION - ATLANTA, GA

REV	BY	DATE	DESCRIPTION
P1	DJL	8/5/05	PRELIMINARY ENGINEERING PHASE REPORT

LOCATION: BIG FOUR NO. 1 TUNNEL, BIG FOUR, WV

TITLE: TUNNEL CLEARANCE CROSS SECTIONS – 1 OF 2

DGN | PTD No. | VRN | 16278 | MILE POST N-394.24

DWN | FILE No. | DRAWING NUMBER

CHK | DATE APRIL 8, 2005

FILE NAME = $FILE$
DATE/TIME = $DATE$ $TIME$

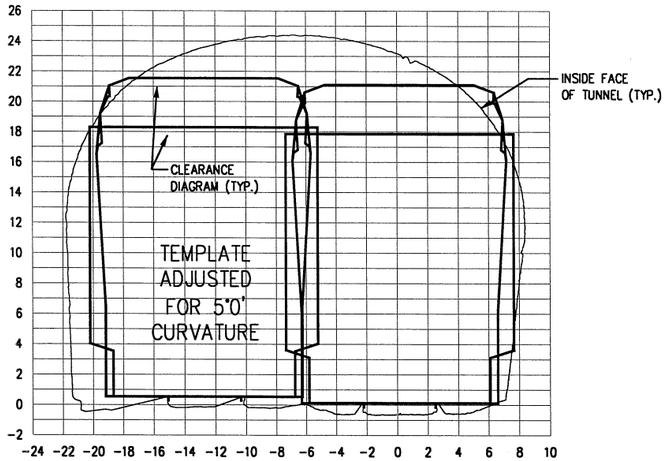

3+01

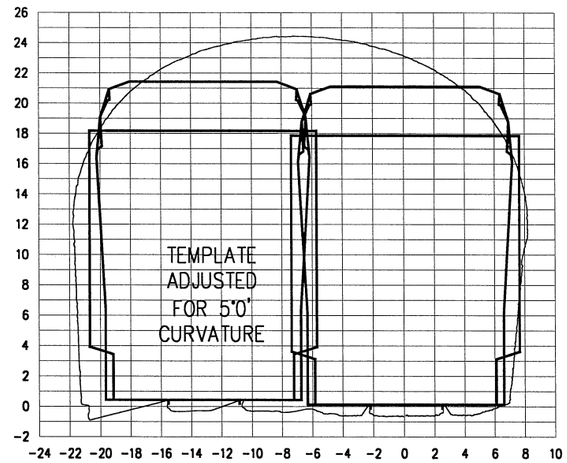

4+02

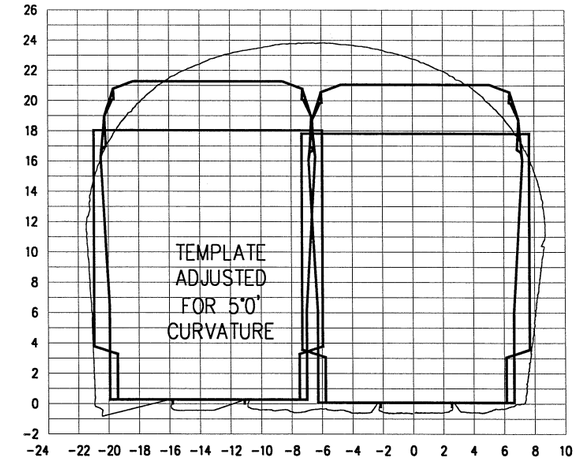

5+01

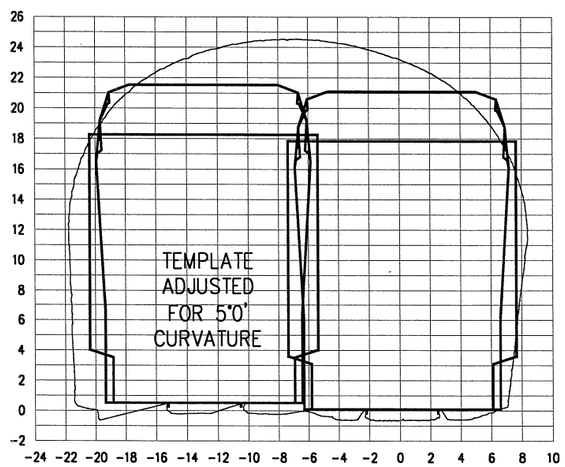

3+52

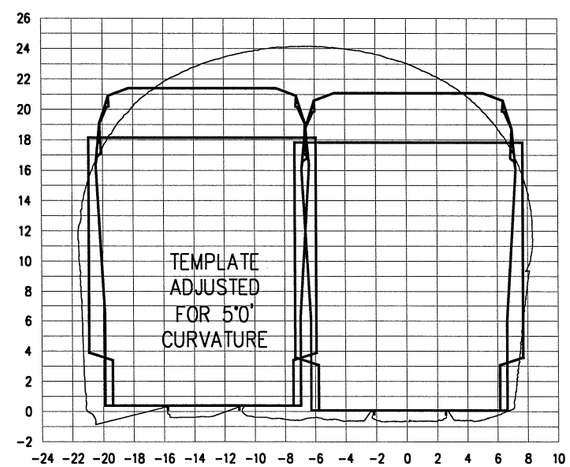

4+50

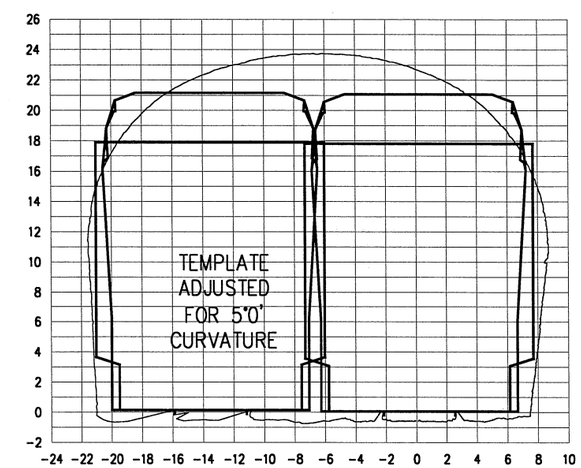

5+51

NOTES:

1. HORIZONTAL DATUM IS PARALLEL TO TRACK. WHERE TRACK IS SUPERELEVATED, DATUM IS NOT PARALLEL WITH GROUND.
2. CROSS SECTION GIVEN FOR STA. 0+00 IS A COMPOSITE FOR THE TUNNEL FROM STA. 0+00 THROUGH 0+50. ALL OF THE SECTIONS FOLLOW THIS CONVENTION.

NOT FOR CONSTRUCTION

SCALE: 1" = 100'

50 0 100 200 300

Hatch Mott MacDonald

NORFOLK SOUTHERN

OWNING COMPANY
POCAHONTAS
OPERATING DIVISION
OFFICE OF THE CHIEF ENGINEER - DESIGN AND CONSTRUCTION - ATLANTA, GA.

REV	BY	DATE	DESCRIPTION
P1	DJL	8/5/05	PRELIMINARY ENGINEERING PHASE REPORT

LOCATION: BIG FOUR NO. 1 TUNNEL, BIG FOUR, WV

TITLE: TUNNEL CLEARANCE CROSS SECTIONS - 2 OF 2

DGN | PID No. | VRN | 16278 | MILE POST N-394.24

DWN | FILE No. | DRAWING NUMBER

CHK | DATE APRIL 8, 2005

FILE NAME = $FILE$
DATE/TIME = $DATE$ $TIME$

STA. 0+00

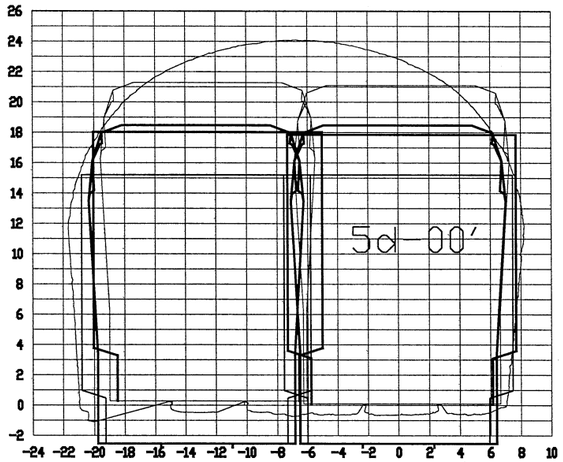

STA. 2+51

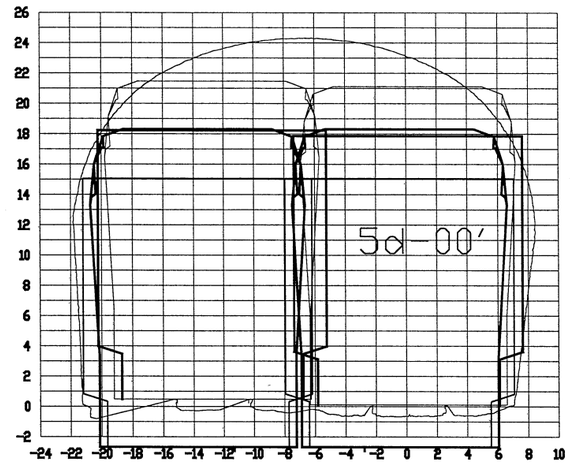

STA. 5+51

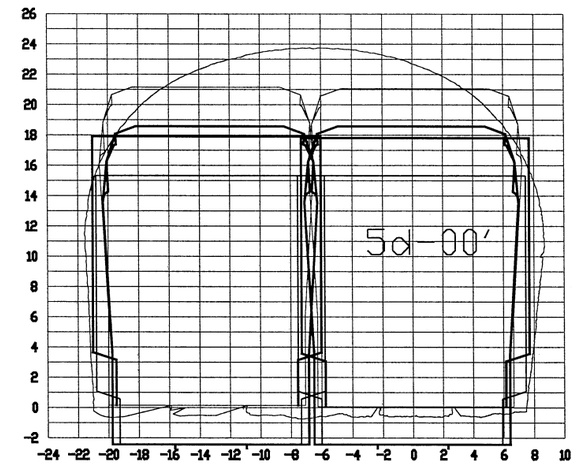

NOT FOR CONSTRUCTION

SCALE: 1" = 100'

50 0 100 200 300

Hatch Mott MacDonald

NORFOLK SOUTHERN

OWNING COMPANY
POCAHONTAS
OPERATING DIVISION
OFFICE OF THE CHIEF ENGINEER - DESIGN AND CONSTRUCTION - ATLANTA, GA.

REV	BY	DATE	DESCRIPTION
P1	MJL	8-5-05	PRELIMINARY ENGINEERING PHASE REPORT

LOCATION: BIG FOUR NO. 1 TUNNEL, BIG FOUR, WV

TITLE: PROPOSED TUNNEL CLEARANCE CROSS SECTIONS

DGN	PTID No.	VRN	16278	MILE POST	N-394.24
DWN	FILE No.			DRAWING NUMBER	
CHK	DATE	APRIL 8, 2005			

FILE NAME = $FILE$
DATE/TIME = $DATE$ $TIME$

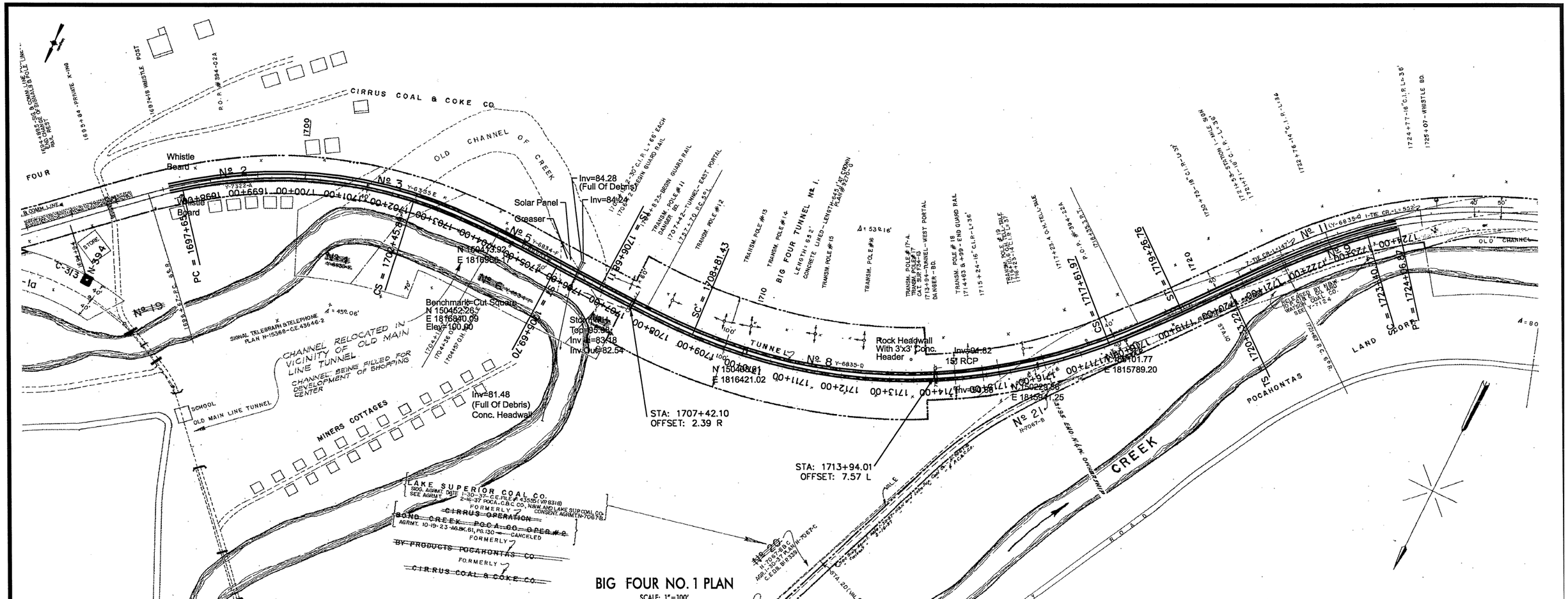

BIG FOUR NO. 1 PLAN

SCALE: 1"=100'

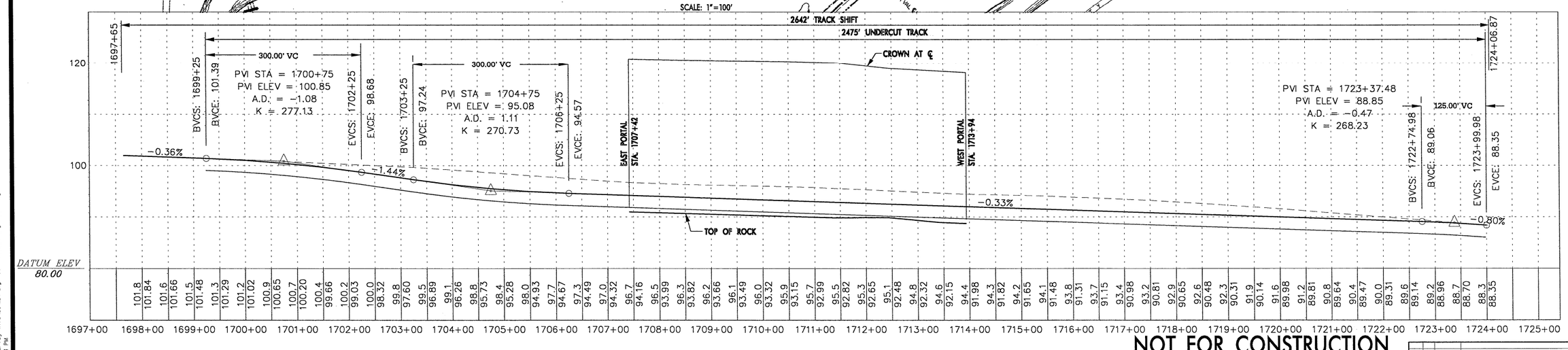

BIG FOUR NO. 1 PROFILE

SCALE: 1"=100' HORIZ.
1"=10' VERT.

NOT FOR CONSTRUCTION

SCALE: 1"=100'

Hatch Mott MacDonald

NORFOLK SOUTHERN

OWNING COMPANY
POCAHONTAS
OPERATING DIVISION
OFFICE OF THE CHIEF ENGINEER - DESIGN AND CONSTRUCTION - ATLANTA, GA.

REV	BY	DATE	DESCRIPTION
P2	DJL	10/14/05	PRELIMINARY ENGINEERING PHASE REPORT
P1	MJL	8/5/05	PRELIMINARY ENGINEERING PHASE REPORT

LOCATION: BIG FOUR NO. 1 TUNNEL, BIG FOUR, WV

TITLE: PLAN AND PROFILE

DGN | PID No. | VRN 16278 | MILE POST N-394.24
DWN | FILE No. | DRAWING NUMBER
CHK | DATE APRIL 8, 2005

FILE NAME = P:\NSR\209399\CAD\survey info\394.24 Big Four 1\394.24 big four 1.dgn
DATE/TIME = 10/12/2005 02:29:24 PM

Project: 394-24 Sun August 07 10:09:02
2005
Horizontal Alignment Station and Curve Report.
Alignment: bfour1
Desc: Big Four w/13.25' centers

Desc.	Station	Spiral/Curve Data			Northing	Easting
PI	16+97.65				150584.4084	1817645.6486
	Length:	343.25	Course:	S 52-38-49.3 W		
PI	20+40.90				150376.1515	1817372.7959
	Length:	590.39	Course:	N 86-22-00.0 W		
	Delta:	40-59-10.7				
		Circular Curve Data				
PC	16+97.65				150584.4084	1817645.6486
CC					151298.7043	1817100.4567
SC	21+78.54				150406.2391	1817205.1404
	Delta:	30-39-46.4	Type:	RIGHT		
	Radius:	898.58	DOC:	06-22-34.4		
	Length:	480.89	Tangent:	246.35		
	Mid-Ord:	31.98	External:	33.16		
	Chord:	475.18	Course:	S 67-58-42.6 W		
	Es:	63.33				
		Spiral Curve Data: CLOTHOID				
SC	21+78.54				150406.2391	1817205.1404
SPI					150393.6257	1817097.6065
PC	25+02.35				150407.3291	1816881.8004
	Length:	323.81	L Tan:	216.24		
	Radius:	898.58	S Tan:	108.27		
	Theta:	10-19-24.2	P:	4.86		
	X:	322.76	K:	161.73		
	Y:	19.40	A:	539.42		
	Chord:	323.34	Course:	N 89-48-24.7 W		
	Ts:	491.98				
PI	26+00.76				150413.5653	1816783.5914
	Length:	683.30	Course:	N 86-22-00.0 W		
	Delta:	0-00-00.0				
		Tangent Data				
	25+02.35				150407.3291	1816881.8004
	26+00.76				150413.5653	1816783.5914
	Length:	98.41	Course:	N 86-22-00.0 W		
PI	32+84.06				150456.8671	1816101.6611
	Length:	766.83	Course:	S 40-31-52.2 W		
	Delta:	53-06-07.8				
		Spiral Curve Data: CLOTHOID				
TS	26+00.76				150413.5653	1816783.5914
SPI					150422.5817	1816641.5985
SC	28+14.08				150420.5176	1816570.4629
	Length:	213.32	L Tan:	142.28		
	Radius:	1154.06	S Tan:	71.17		
	Theta:	5-17-43.5	P:	1.64		
	X:	213.14	K:	106.63		
	Y:	6.57	A:	496.17		
	Chord:	213.24	Course:	N 88-07-54.0 W		
	Ts:	683.30				
		Circular Curve Data				
SC	28+14.08				150420.5176	1816570.4629
CC					149266.9397	1816603.9362
SC	36+94.62				150077.5807	1815782.5206
	Delta:	43-42-58.2	Type:	LEFT		
	Radius:	1154.06	DOC:	04-57-52.9		
	Length:	880.54	Tangent:	462.95		
	Mid-Ord:	82.97	External:	89.39		
	Chord:	859.34	Course:	S 66-28-47.4 W		
	Es:	137.53				
		Spiral Curve Data: CLOTHOID				
SC	36+94.62				150077.5807	1815782.5206
SPI					150038.4656	1815743.9186
PC	38+59.41				149954.9458	1815672.5074
	Length:	164.79	L Tan:	109.89		
	Radius:	1154.06	S Tan:	54.96		
	Theta:	4-05-26.1	P:	0.98		
	X:	164.70	K:	82.38		
	Y:	3.92	A:	436.09		
	Chord:	164.75	Course:	S 41-53-40.7 W		
	Ts:	660.38				
PI	39+65.87				149874.0326	1815603.3247
	Length:	246.45	Course:	S 40-31-52.2 W		
	Delta:	0-00-00.0				
		Tangent Data				
	38+59.41				149954.9458	1815672.5074
	39+65.87				149874.0326	1815603.3247
	Length:	106.46	Course:	S 40-31-52.2 W		
PI	42+12.31				149686.7204	1815443.1687
	Length:	128.46	Course:	S 53-23-33.0 W		
	Delta:	12-51-40.8				
		Spiral Curve Data: CLOTHOID				
TS	39+65.87				149874.0326	1815603.3247
SPI					149717.9920	1815469.9066
SC	42+73.42				149651.2906	1815391.7370
	Length:	307.56	L Tan:	205.30		
	Radius:	979.52	S Tan:	102.76		
	Theta:	8-59-42.0	P:	4.02		
	X:	306.80	K:	153.65		
	Y:	16.07	A:	548.87		
	Chord:	307.22	Course:	S 43-31-44.0 W		
	Ts:	246.45				
		Circular Curve Data				
SC	42+73.42				149651.2906	1815391.7370
CC					150396.4176	1814755.9267
PT	43+39.52				149610.1143	1815340.0466
	Delta:	03-51-58.8	Type:	RIGHT		
	Radius:	979.52	DOC:	05-50-57.6		
	Length:	66.10	Tangent:	33.06		
	Mid-Ord:	0.56	External:	0.56		
	Chord:	66.09	Course:	S 51-27-33.6 W		
	Es:	8.39				
PI	43+39.52				149610.1143	1815340.0466

Vertical Alignment Report

PVIStation	Elevation	Grade Out (%)	Curve Length
11697+65	101.96	-0.36	
21700+75	100.85	-1.44	300.00

Vertical Curve Information: (crest curve)
PVC Station:1699+25 Elevation:101.39
PVI Station: 1700+75 Elevation: 100.85
PVT Station:1702+25 Elevation:98.68
Grade in (%): -0.36 Grade out (%): -1.44
Change (%): 1.08 K: 277.13
Curve Length: 300.00

31704+75 95.08 -0.33 300.00
Vertical Curve Information: (sag curve)
PVC Station:1703+25 Elevation:97.24
PVI Station: 1704+75 Elevation: 95.08
PVT Station:1706+25 Elevation:94.57
Grade in (%): -1.44 Grade out (%): -0.33
Change (%): 1.11 K: 270.73
Curve Length: 300.00

41723+37.48 88.85 -0.80 125.00
Vertical Curve Information: (crest curve)
PVC Station:1722+74.98 Elevation:89.06
PVI Station: 1723+37.48Elevation: 88.85
PVT Station:1723+99.98Elevation:88.35
Grade in (%): -0.33 Grade out (%): -0.80
Change (%): 0.47 K: 268.23
Curve Length: 125.00

SCALE: 1" = 100'

50 0 100 200 300

NOT FOR CONSTRUCTION

Hatch Mott MacDonald

NORFOLK SOUTHERN
OWNING COMPANY
POCAHONTAS
OPERATING DIVISION
OFFICE OF THE CHIEF ENGINEER - DESIGN AND CONSTRUCTION - ATLANTA, GA.

REV	BY	DATE	DESCRIPTION
PI	MJL	8-5-05	PRELIMINARY ENGINEERING PHASE REPORT

LOCATION: BIG FOUR NO. 1 TUNNEL, BIG FOUR, WV
TITLE: CURVE DATA
DGN | PID No. | PRN | 16278 | MILE POST N-394.24
DWN | FILE No. | DRAWING NUMBER
CHK | DATE APRIL 8, 2005

FILE NAME = P:\NS\20339\CAD\survey infra\394.24 big four 1\394.24 big four 1-curve data.dgn
DATE/TIME = 10/12/2005 06:08:35 PM

This map was not prepared or intended for use as a real estate title map. The railway company does not represent or suggest that the property lines and right-of-way lines shown on the map are accurate or that any other information on the map is correct. The company does not represent that it has checked this map for accuracy.

SCHEDULE OF PROPERTY

NO.	GRANTOR	GRANTEE	INSTRUMENT	DATE	RECORD	CUST. NO.	REMARKS
1	ANDREW BELCHER, ET UX.	W. V. & I. R.R. CO.	DEED	MAY 9 1890	DB 14 116	SEPT. 26 1890 9019	C.E.D.B.6 P.354
2	ANDREW BELCHER, ET UX.	N.&W. RY. CO.	"	APR. 28 1908	DB 51 359	APR. 29 1908 8019-A	33 97
2	CIRRUS COAL & COKE CO. LESSEE	"	"	FEBY. 25 1910	DB 56 394	MAR. 7 1910 8019-A	37 161
3	E. W. CLARK, L. N. COLTON JR. AND H. M. BELL, TRUSTEES	W. V. & I. R.R. CO.	"	DEC. 20 1889	DB 14 113	SEPT. 25 1890 8021	6 357
3	POCAHONTAS COAL & COKE CO.	N.&W. RY. CO.	DEED OF EXCHANGE	SEPT. 3 1907	DB 49 410	OCT. 3 1909 8024	30 155
~~4~~	~~POCAHONTAS COAL & COKE CO.~~	"	~~AGREEMENT~~	~~NOV. 14 1907~~	~~DB 49 204~~	~~OCT. 11 1907 8024~~	~~30 155~~
5	WATSON COAL COMPANY	"	DEED OF EXCHANGE	JANY. 28 1908	DB 51 150	MAR. 5 1908 8022-A	35 41
~~6~~	~~WATSON COAL COMPANY~~	"	~~AGREEMENT~~	~~JANY. 9 1908~~	~~DB 51 163~~	~~MAR. 5 1908 8022-A~~	~~35 98~~
~~7~~	~~POCAHONTAS COAL & COKE CO.~~	"	~~"~~	~~AUG. 14 1907~~	~~DB 49 204~~	~~OCT. 11 1907 8024~~	~~30 155~~
8	POCAHONTAS COAL & COKE CO.	"	DEED OF EXCHANGE	SEPT. 3 1907	DB 49 410	OCT. 3 1907 8024	30 155
9	WATSON COAL COMPANY	"	DEED	NOV. 21 1899	DB 24 411	DEC. 11 1899 8022	12 256
10	POCAHONTAS COAL & COKE CO.	"	DEED OF EXCHANGE	SEPT. 3 1907	DB 49 410	OCT. 3 1907 8024	30 155
11	POCAHONTAS COAL & COKE	"	DEED OF EXCHANGE	SEPT. 3 1907	DB 49 410	OCT. 3 1907 8024	30 155
12	WATSON COAL COMPANY	"	DEED	JANY. 28 1908	DB 51 150	MAR. 5 1908 8022-A	35 41
~~13~~	~~WATSON COAL COMPANY~~	"	~~AGREEMENT~~	~~JANY. 9 1908~~	~~DB 51 163~~	~~MAR. 5 1908 8022-A~~	~~35 98~~
14	WATSON COAL COMPANY	"	DEED OF EXCHANGE	JANY. 28 1908	DB 51 150	MAR. 5 1908 8022-A	35 41
15	WATSON COAL COMPANY	"	DEED OF EXCHANGE	JANY. 28 1908	DB 51 150,	MAR. 5 1908 8022-A	35 41
1a	NORFOLK & WESTERN RY. CO.	GUMCHER DEVCOR, INC.	QUITCLAIM	JAN. 4, 1993		NW-79	0.46 ACRE

Part Released to Poca. Coal & Coke-Deed Sept.3, 1907-Cb.DB.49 P.110 C.E.D.B.30 P.41
- WATSON COAL CO. " JAN. 28, 1908 - CO. D.B. 51 P. 150 C.E.D.B.30 P.155

SCHEDULE OF PROPERTY

NO.	GRANTOR	GRANTEE	INSTRUMENT	DATE	RECORD	CUST. NO.	REMARKS
16	E. W. CLARK, L. N. COLTON, JR. AND H. M. BELL, TRUSTEES	W. V. & I. R.R. CO.	DEED	DEC. 20 1889	DB 14 128	OCT. 1 1890 8023	C.E.D.B.6 P.357
17	POCAHONTAS COAL & COKE CO.	N.&W. RY. CO.	DEED OF EXCHANGE	SEPT. 3 1907	DB 49 410	OCT. 3 1907 8024	30 155
18	~~CIRRUS COAL & COKE CO.~~	~~"~~	~~AGREEMENT~~	~~OCT. 31 1908~~	~~DB 52 [illegible]~~	~~NOV. 14 1908 8024~~	~~30 155~~
19	~~CIRRUS COAL & COKE CO.~~	~~"~~	~~AGREEMENT~~	~~OCT. 31 1908~~	~~DB 52 [illegible]~~	~~NOV. 14 1908 8024~~	~~30 155~~
~~20~~	~~POCAHONTAS COAL & COKE CO.~~	~~N.&W. RY. CO.~~	~~AGREEMENT~~	~~JAN. 30 1937~~	~~— SEE OLD PARC. #18 ABOVE —~~		
~~21~~	~~POCAHONTAS COAL & COKE CO.~~	~~N.&W. RY. CO.~~	~~SUB. AGR.~~	~~JAN. 30, 1937~~	~~PLAN N-7067 C.E.D.B. 81 P.339~~		
	LAKE SUPERIOR COAL CO. LESSEE				PLAN N-7067-B ABV. EK. 97, P. 54		

Operation Taken Over By Lake Superior Coal Co. 11-30-37 - Trans (B) Notified To New Location - Lease Now Owned By L.S.C.C. See Map Of Agreement Under Parc. #20 Above.

Operation Taken Over By Lake Superior Coal Co. 11-30-37 - Trans (B) Notified To New Location - Lease Now Owned By L.S.C.C. See Map Of Agreement Under Parc. #20 Above.

Tracks Retired From Parc.# 19-W-6306 (9028)

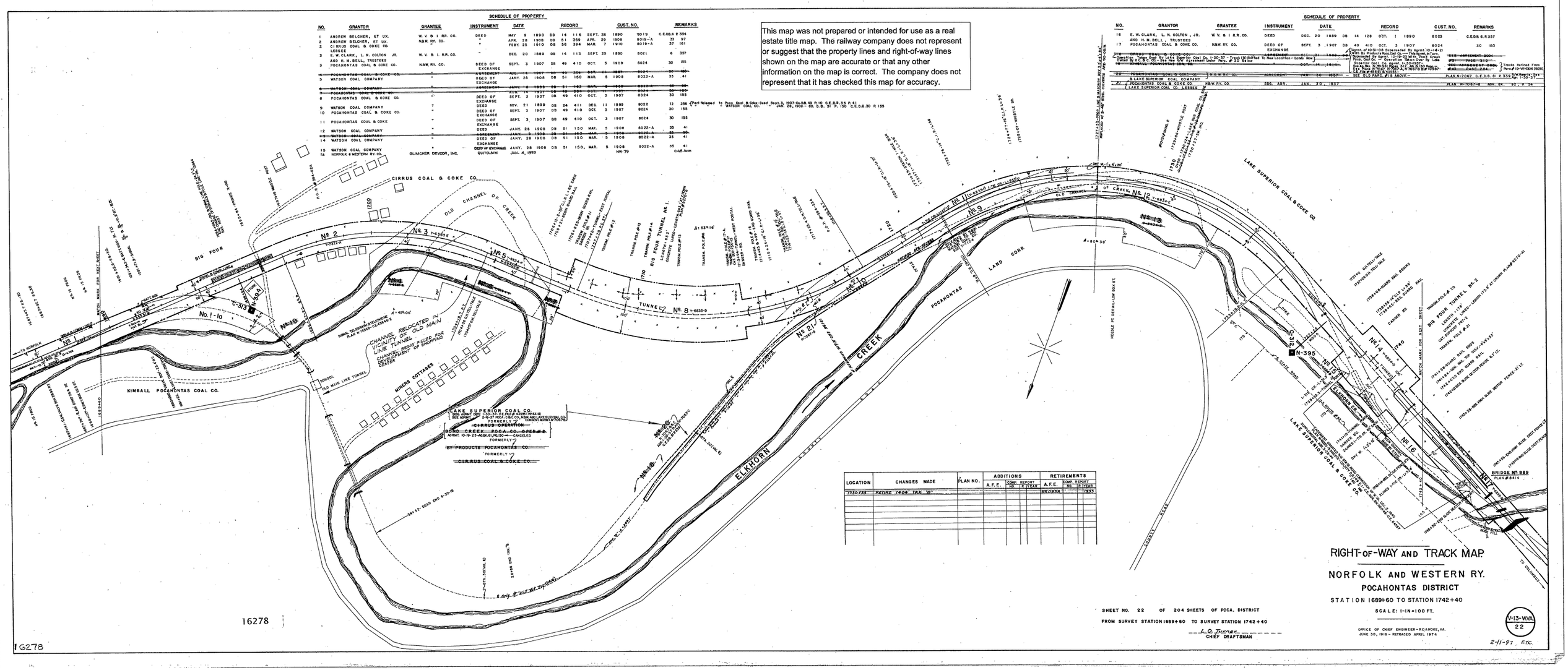

LOCATION	CHANGES MADE	PLAN NO.	ADDITIONS A.F.E.	ADDITIONS COMP. REPORT NO.	ADDITIONS COMP. REPORT R. YEAR	RETIREMENTS A.F.E.	RETIREMENTS COMP. REPORT NO.	RETIREMENTS COMP. REPORT R. YEAR
1730.132	RETIRE 1406' TRK. "B"					95.0978		1935

SHEET NO. 22 OF 204 SHEETS OF POCA. DISTRICT

FROM SURVEY STATION 1689+60 TO SURVEY STATION 1742+40

L. O. Turner
CHIEF DRAFTSMAN

RIGHT-OF-WAY AND TRACK MAP

NORFOLK AND WESTERN RY.

POCAHONTAS DISTRICT

STATION 1689+60 TO STATION 1742+40

SCALE: 1-IN=100 FT.

OFFICE OF CHIEF ENGINEER-ROANOKE, VA.
JUNE 30, 1916 - RETRACED APRIL 1974

V-13-W.VA.
22

2-11-97 ETC.

16278