Heartland Corridor, Walton Virginia to Columbus Ohio

Preliminary Engineering Phase Report

Cowan Tunnel – MP N305.43

October 14, 2005, Rev. 2

Hatch Mott MacDonald

Hatch Mott MacDonald

Preliminary Engineering Phase Report

October 14, 2005

Norfolk Southern Railway
Heartland Corridor, Walton VA to Columbus OH

Cowan Tunnel – MP N305.43

Statistics: Virginia Division
Single-width Tunnel for Main #1
Length = 3,302'
Gunite over Brick and Concrete
Tangent Track
Superelevation = 0.0”

1. EXISTING CONDITIONS 2

2. CLEARANCE IMPROVEMENT ALTERNATIVES 5

3. PREFERRED ALTERNATIVE 6

4. USGS TOPOGRAPHIC MAP 7

5. AERIAL PHOTO 8

6. TRACK CHART 9

7. PHOTOS 10

8. ESTIMATE 12

9. DRAWINGS 14

Tunnel Clearance Cross Sections

Plan and Profile

Valuation Map

1. EXISTING CONDITIONS

1.1 Background

Based on the Valuation Maps (V-10VA/26 & 27) information:

- Parcels for the tunnel were acquired in 1899. It is therefore suspected that the tunnel was constructed in 1899 or shortly afterwards.
- There is an additional notation regarding "concrete lining" in 1919. This may be when the gunite was applied over the brick.

Additional information on this tunnel was obtained from various sources such as topographic maps, aerial photos, inspection reports, track charts, and field investigations that were performed on March 10-11 and July 22-24, 2005.

1.2 General Area

The tunnel is located in a sparsely populated area with limited access to the west portal. No practical access to the east portal for vehicles was observed.

The tunnel crosses under a portion of the Radford Army Ammunition Plant. The existence of the plant over the tunnel limits the access for construction to the top of the ground over the tunnel.

There is no road access to east portal. Access to west portal is via the paved Gate 10 Road with a short (1/4 mile long) stretch of unnamed gravel roads to the a gravel parking lot located about 1000 feet from the west portal. Due to the narrowness of the portal cut and the presence of deep drainage ditches along the roadbed, the portal can only be accessed by following the track for about 1000 feet.

1.3 Structural Conditions

The tunnel is 3,302' long with a lining consisting of gunite-over-brick or concrete arch, and a nominal width of 15'. It is a single-width tunnel for one track. A slide fence circuit is mounted on the south wall. The existing subgrade appears to be near to the bottom of the footing for the liners. Lowering the invert may undermine the liner. The liner footing is comprised of 24"-thick stone blocks.

Liner cores were taken on July 22-24, 2005. Cores were drilled into the liner at five different locations in the tunnel at the 7, 10, and 12 o'clock positions at each location. Five samples of concrete from the liner core investigation were saved and tested for compressive strength. The liner probe investigation is summarized in the table below:

Summary of Cowan Tunnel Liner Core Investigation				
Distance from East Portal (feet)	**Position**	**Liner Thickness**	**Notes**	**Compressive Strength (sample location within the core)**
250	7 o'clock	26"		
250	10 o'clock	22"	Large void, took video	2,553psi (2”-14”)
250	12 o'clock	24"		
750	7 o'clock	44"		1,532psi (25”-40”)
750	10 o'clock	22"	8" Void, took video	
750	12 o'clock	22"	Bedrock weak after liner	5,050psi (0”-5”)
1500	7 o'clock	25"	Void, no video taken	
1500	10 o'clock	26"	Large void, no video taken	1,694psi (4”-13”)
1500	12 o'clock	26"	Large void (up to 52"), no video taken	
2552	7 o'clock	42"		
2552	10 o'clock	25"		
2552	12 o'clock	25"	Concrete in poor shape at rock/concrete interface.	
3052	7 o'clock	33"		2,480psi (1.5”-13”)
3052	10 o'clock	28"		
3052	12 o'clock	27"		

1.4 Track

The track is of conventional design with wooden crossties and a stone ballast section. The ballast is fouled and does not drain properly. The ballast from this tunnel was tested and classified as being “Very Strong”, requiring many blows of a geological hammer to break intact rock specimens.

1.5 Geotechnical

The Virginia Division tunnels are located in the Valley and Ridge Physiographic Province, a region characterized by linear ridges and valleys formed by differential weathering of the rock. The description of the site geology is based on our observations of the rockmass at the portals and adjacent cuts and two Virginia Geologic Survey geologic reports: *Geologic Map of Giles County, Virginia* and *Geology of the Appalachian Valley in Virginia*. The tunnels themselves are lined and no rock was exposed.

The tunnel is excavated in thick-bedded dolomite and very thin- to thin-bedded shaley limestone and dolomite of the Elbrook Dolomite. The topographic map of the site area shows sinkholes present at the ground surface adjacent to the tunnel alignment. Bedding dips towards the east and southeast.

The geoprobes indicate that the top of rock is located between 1.8' to 5.0' (averaging about 3.2') below the top of ballast throughout the tunnel. Top of ballast is typically about 0.8' below top of low rail. A sample of rock was taken from the portal and tested. Lab testing of the sample indicates that it is limestone with a compressive strength of 6,877 psi. The rock quality designation, Q, at the portals was determined to be 11. A Q rating between 10 and 40 is considered "Good" with 10 bordering on "Fair" and 40 bordering on "Very Good."

1.6 Clearances

The laser car measurements indicate that the existing tunnel has adequate horizontal clearances for the composite design template but inadequate vertical clearance for the entire tunnel. The template encroaches the tunnel lining over the entire width of the crown of the tunnel for 88% of the tunnel length. For the remaining 12% of the tunnel length the clearance envelope encroaches the lining at the 1 o'clock and 11 o'clock positions. See the Tunnel Clearance Cross Sections portion of this report for illustrations of the encroachments. The encroachments are summarized in the table below:

	Crown Encroachment (radial inches)	
Distance (ft) from East Portal	**Left Side**	**Right Side**
0	21	21
201	12	18
401	16	19
602	18	21
801	17	22
1002	15	21
1201	19	21
1402	19	20
1601	18	21
1801	18	18
1950	16	18
2002	6	10
2202	4	7
2353	4	8
2401	15	18
2600	18	18
2802	18	20
3005	17	17
3200	16	19
3351	23	21

2. CLEARANCE IMPROVEMENT ALTERNATIVES

Given the magnitude of the vertical clearance deficiency, there are three general alternatives that can be used to obtain the clearance; replacing the lining, lowering the track, and undercutting the track.

2.1 Liner Replacement

The magnitude of the encroachments, coupled with the liner type and thickness, eliminates the possibility for any portion of the crown to remain. To obtain the desired clearance, the existing brick arch must be demolished, the native rock excavated to the clearance limits plus the new liner thickness, and a new concrete liner installed. This method appears to be necessary for the entire length of the tunnel.

2.2 Track Lowering

The preliminary indications that the existing subgrade is near the elevation of the wall footings adds additional considerations to the track lowering such as underpinning the liner or reducing the track thickness.

Excavation would involve removing the track and using conventional earth moving equipment to remove the ballast and subgrade materials. The entire operation would require approximately an 8-day outage and continuous work to remove the track, excavate the subgrade, and restore the track. The production rate would be limited by having to back the dump trucks down the tunnel. New drainage installation and subgrade stabilization could be accomplished from the subgrade directly. The resulting track structure would be completely new except for the rail.

2.3 Track Undercutting

The preliminary indications that the existing subgrade is near the elevation of the wall footings adds additional considerations to the track undercutting such as underpinning the liner or reducing the track thickness.

A mainline track undercutter with a conveyor and air dump cars could accomplish undercutting over the course of 5-6 days of 8-hour work windows. Using a work train engine to move the air-dump cars to the disposal site would allow the undercutter to remain setup with the bar under the track. The run-in and run-out of the undercut area would need to be surfaced daily to accommodate the trains.

Three to four days of prep work will be required to plug and spike the exiting ties to keep them from falling off of the rail behind the undercutter bar. Plate-boys with modifications to the jacks could be used to lift the track to allow geotextile to be installed under the skeletonized track.

3. PREFERRED ALTERNATIVE

Given the magnitude of the vertical encroachment and the liner type and thickness, liner replacement of the entire tunnel crown for the length of the tunnel is necessary to achieve the required clearance. Track lowering by excavating or undercutting does not appear feasible due to the proximity of the top of rock to the surface. Drainage improvements are also recommended.

3.1 Preliminary Design

The preliminary design uses replacement of the liner crown. The existing track structure is planned to be flooded with ballast to the top of the rail to provide access into the tunnel for the contractor to work and to protect the track during the construction. The preliminary design also proposes to install a new drainage system, underpinning, and undercutting the track to replace the fouled ballast. In the final design stage the potential to employ notching instead of crown replacement will be looked at in further detail for a portion of the tunnel from approximately 2000'-2400' into the tunnel from the east portal.

3.2 Schedule

The estimated schedule for completing improvements on this tunnel is forty-six (46) weeks from mobilization to demobilization. The schedule assumes two crews working in the tunnel for ten hours, five days a week. The schedule assumes 12' of crown removal each day per crew, with liner removal, rock removal, installation of rock dowels and installation of shotcrete all occurring on the same day for each 12' segment. Drainage improvement operations would be undertaken at the same time as the crown removal, but at different locations in the tunnel.

3.3 Estimate

The total estimated cost for achieving clearance at this location is $15.1 million (2005 rates), or $4,580 per foot of tunnel. The work items include mobilization, surveying, liner removal, rock removal, rock dowels, crown installation, rock cut for drainage trench, tunnel drainage system, underpinning, ballast cleaning, and demobilization. The total cost is made up of tunnel, track, signal, and site work items at $8.7 million, plus a 40% construction contingency, a 10% engineering allowance, and a 14% construction management allowance.

4. USGS TOPOGRAPHIC MAP

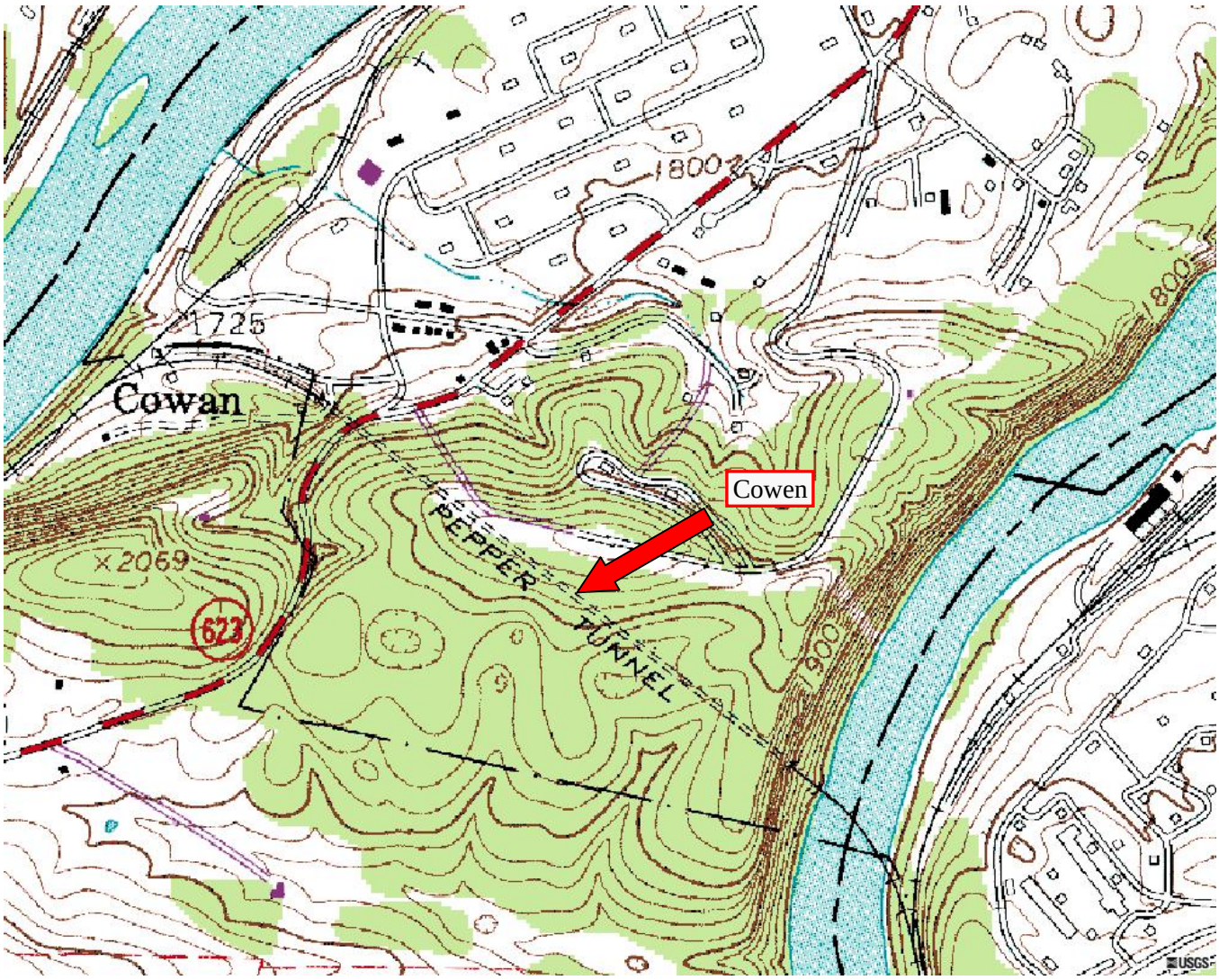

5. AERIAL PHOTO

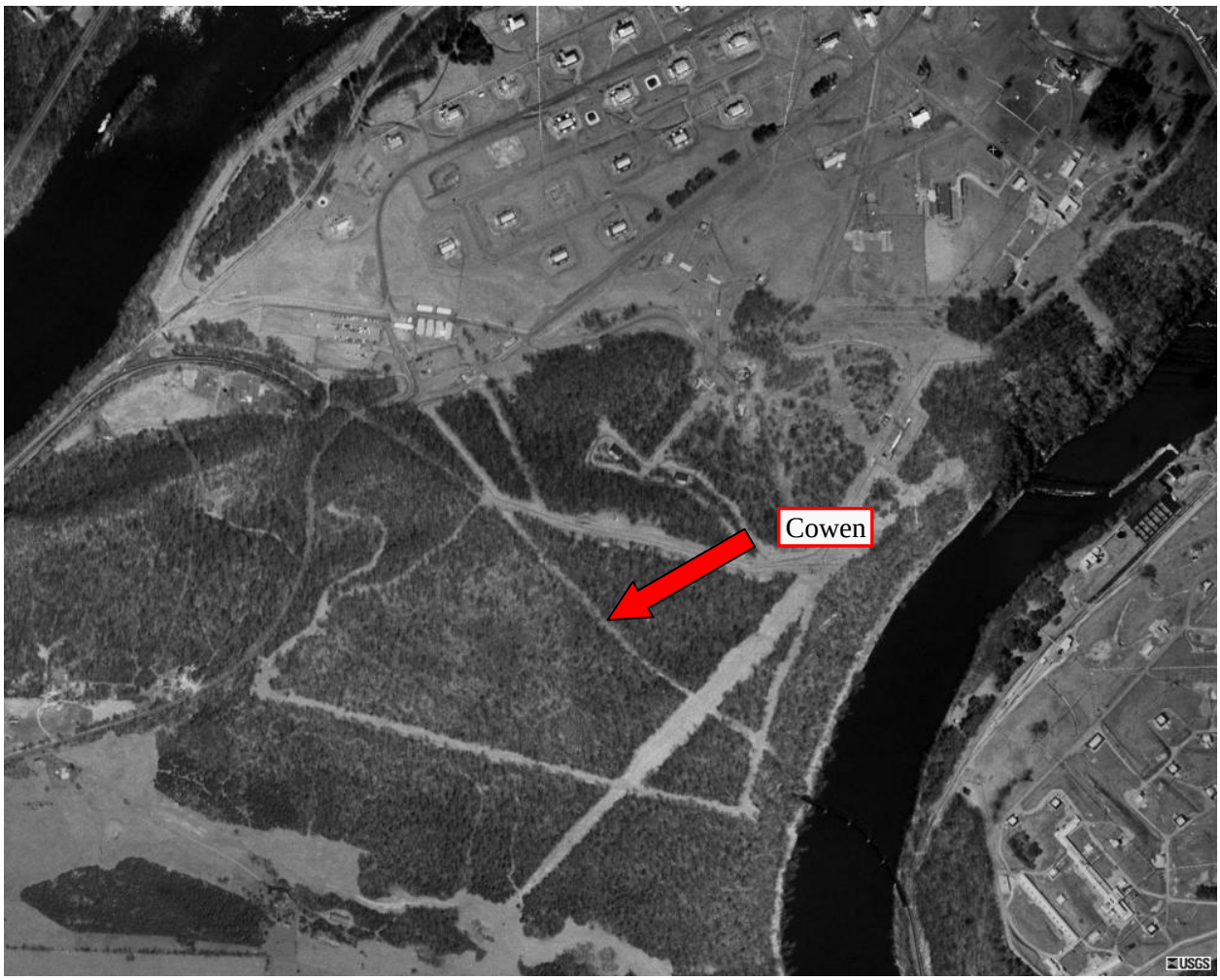

6. TRACK CHART

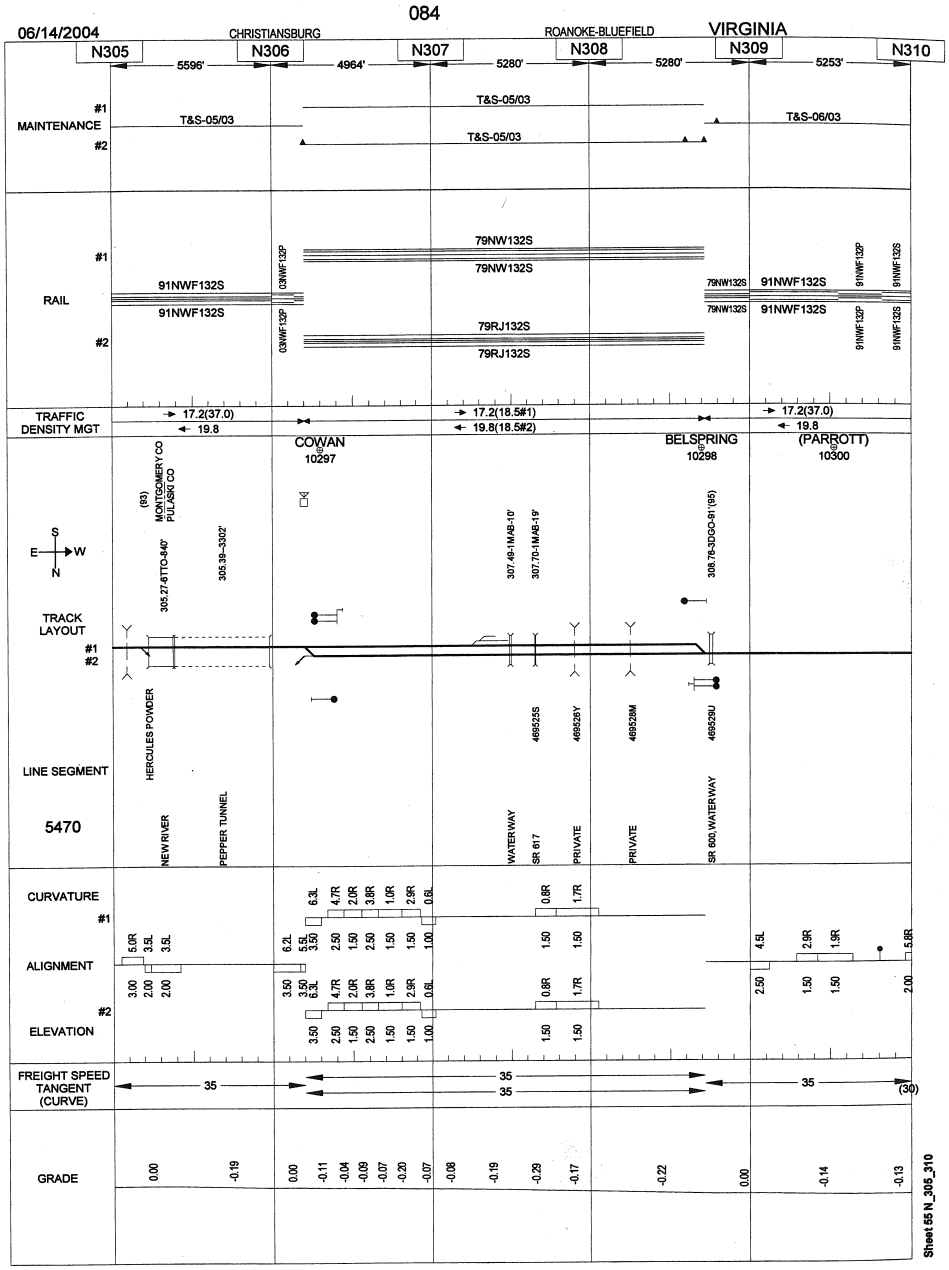

7. PHOTOS

Photo 1. West portal

Photo 2. Brick wall under gunite.

Photo 3. Top of liner footing.

8. ESTIMATE

Cowan

Tunnel Length	3302	ft
Tunnel Width	15.25	ft
# of Tracks	1	

	Contractor		Railroad	
Work Window	16	hrs	10	hrs
Setup & Demobilization Allowance	4	hrs	2	hrs
Production Time	12	hrs	8	hrs

Tunnel Work Items	UOM	Quantity	Unit Rate	Total
Mobilization	%	5%		$375,029.67
Surveying	DY	5	$1,300.00	$6,500.00
Minor Notching	LF			
Deep Notching	LF			
Rock Dowels 14' with Chain Link Mesh - Crown	EA	3852	$410.34	$1,580,776.53
Rock Dowels 14' with Chain Link Mesh - Wall	EA			
Rock Dowels 16'	EA			
Crown Removal	SF	79098	$13.01	$1,029,259.20
Wall Hydrodemolition	SF			
Wall Removal	SF			
Rock Removal - Crown	CY	2930	$341.91	$1,001,659.20
Rock Removal - Wall	CY			
Crown Installation	SF	79098	$21.31	$1,685,632.83
Wall Installation	SF			
Under Pinning	LF	3302	$532.87	$1,759,547.47
Rock Cut Drainage Trench	LF	3702	$97.02	$359,160.00
Tunnel Drainage	LF	3702	$16.65	$61,642.27
Demobilization	DY	5	$3,283.20	$16,416.00
Total Tunnel Work Items	**LF**	**3302**	**$2,385.11**	**$7,875,623.17**

Trackwork Items	UOM	Quantity	Unit Rate	Total
Mobilization	DY			
Undercutting	PF	3302	$15.77	$52,059.44
Surfacing & Lining	PF	9906	$2.08	$20,608.13
Ballasting Track	TN	3302	$38.47	$127,032.64
Total Trackwork Items				**$199,700.21**

Signal Items	UOM	Quantity	Unit Rate	Total
Mobilization	DY			
Relocate Cables / Track Leads	LF	3302	$10.98	$36,268.14
Total Signal Items				**$36,268.14**

Site Items	UOM	Quantity	Unit Rate	Total
Mobilization	DY	1	$2,483.60	$2,483.60
Erosion & Sedimentation Control	EA	1	$11,958.80	$11,958.80
Site Grading	CY			
Rock Excavation	CY			
Sub-Ballast	CY			
Drainage	LF			
Demobilization	DY			
Total Site Items				**$14,442.40**

Special Items	UOM	Quantity	Unit Rate	Total
Mobilization	DY			
Flagging	DY	227	$821.50	$186,480.50
Flood Track with Ballast for Protection	TN	6604	$38.16	$252,029.08
Remove Flooded Ballast	TN	6604	$8.65	$57,107.06
Temporary Bridges	EA			
New Railroad Bridges	EA			
New Highway Bridges	EA			
Invert/Crown Void Grouting	DY	20	$4,448.80	$88,976.00
Demobilization	DY			
Total Specialty Items				**$584,592.65**

Subtotal All Items		**$8,710,626.57**
Construction Contingency	**40%**	**$3,484,250.63**
Engineering Allowance	**10%**	**$1,219,487.72**
Construction Management Allowance	**14%**	**$1,707,282.81**
Total		**$15,121,647.73**

9. DRAWINGS

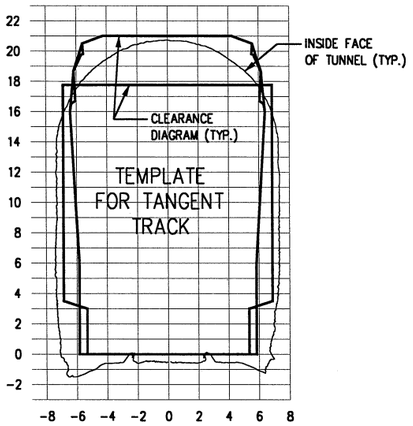

0+00
EAST PORTAL

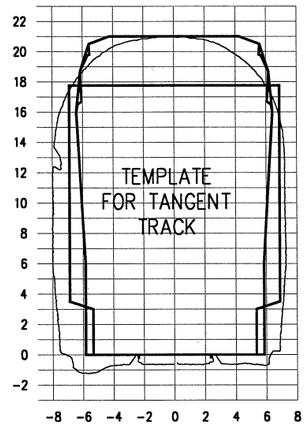

1+02

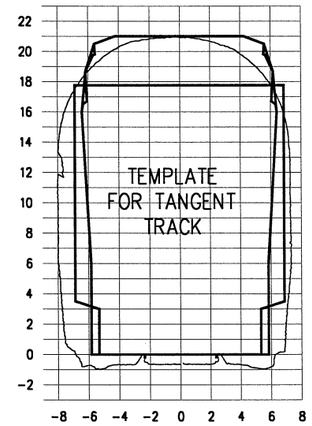

2+01

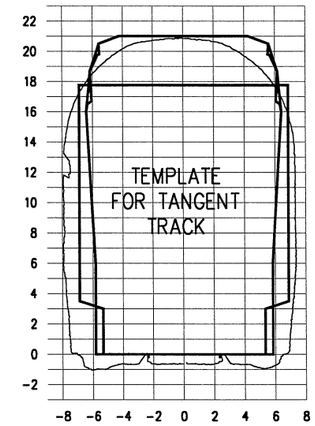

3+01

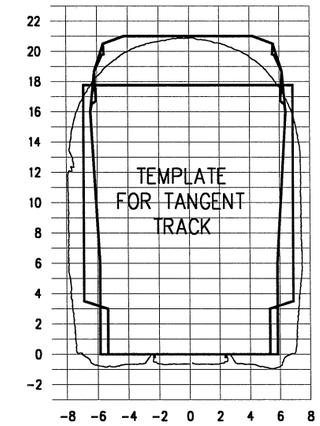

4+01

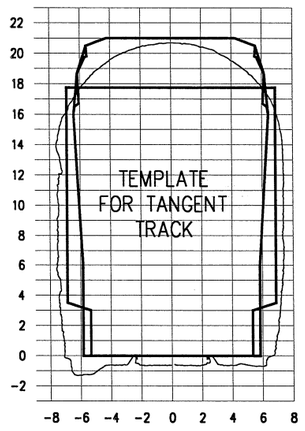

0+51

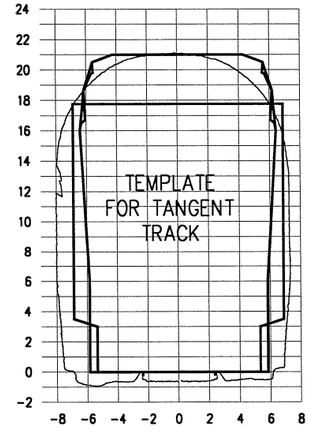

1+51

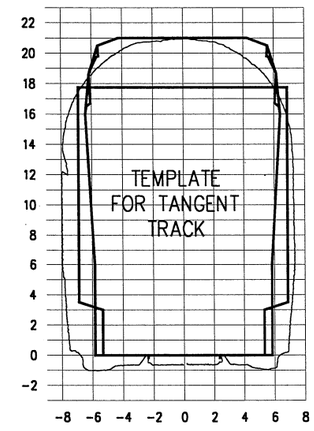

2+52

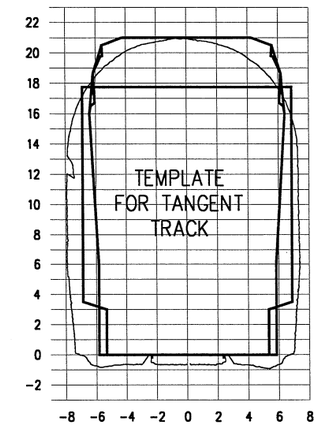

3+51

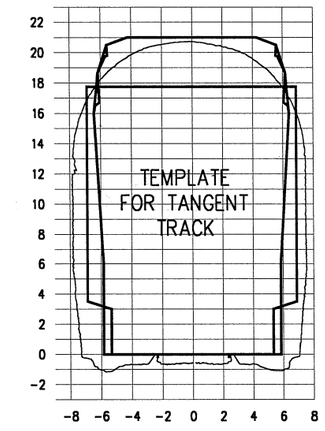

4+51

NOTES:

1. HORIZONTAL DATUM IS PARALLEL TO TRACK. WHERE TRACK IS SUPERELEVATED, DATUM IS NOT PARALLEL WITH GROUND.
2. CROSS SECTION GIVEN FOR STA. 0+00 IS A COMPOSITE FOR THE TUNNEL FROM STA. 0+00 THROUGH 0+50. ALL OF THE SECTIONS FOLLOW THIS CONVENTION.

NOT FOR CONSTRUCTION

SCALE: 1" = 100'

50 0 100 200 300

Hatch Mott MacDonald

NORFOLK SOUTHERN

OWNING COMPANY
VIRGINIA
OPERATING DIVISION
OFFICE OF THE CHIEF ENGINEER - DESIGN AND CONSTRUCTION - ATLANTA, GA.

REV	BY	DATE	DESCRIPTION
P1	DJL	8/5/05	PRELIMINARY ENGINEERING PHASE REPORT

LOCATION: COWAN TUNNEL, COWAN, VA

TITLE: TUNNEL CLEARANCE CROSS SECTIONS – 1 OF 7

DGN | PID No. | VRN 15427 & 15428 | MILE POST N-305.43
DWN | FILE No. | DRAWING NUMBER
CHK | DATE APRIL 1, 2005

FILE NAME = $FILE$
DATE/TIME = $DATE$ $TIME$

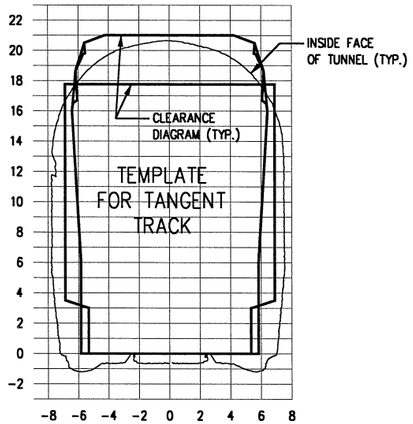

5+01

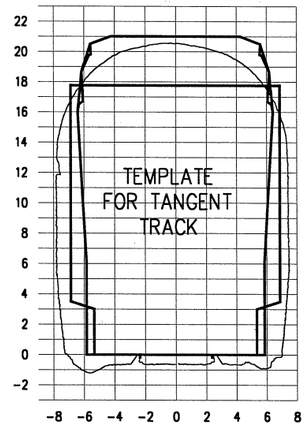

6+02

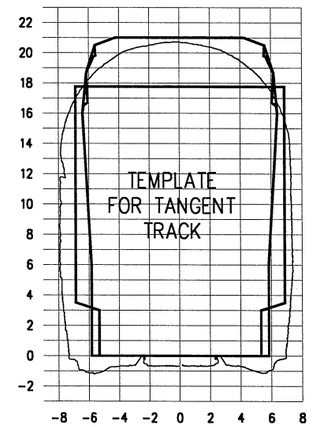

7+01

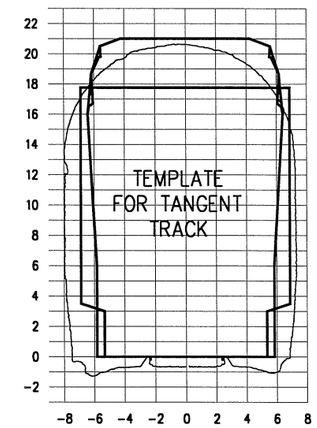

8+01

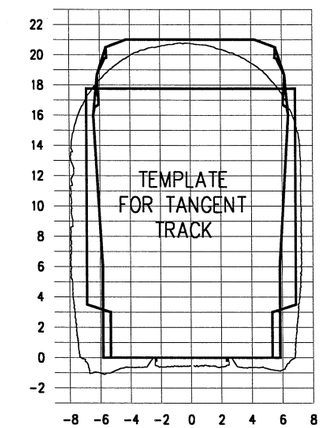

9+01

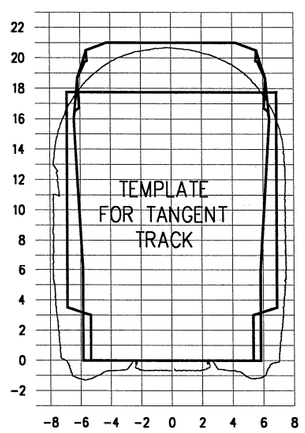

5+51

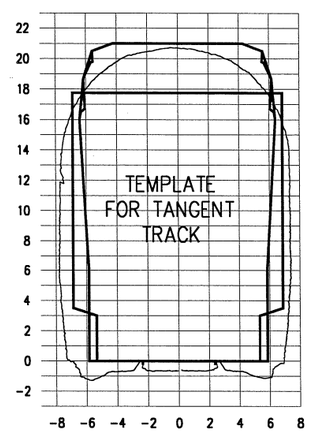

6+52

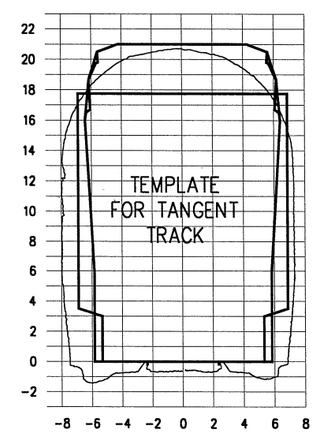

7+51

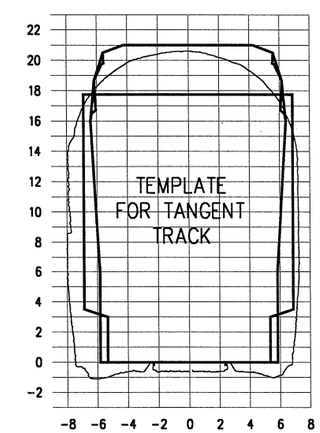

8+50

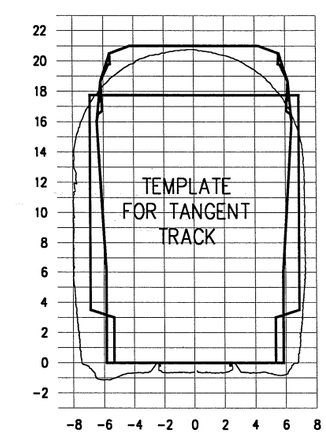

9+53

NOTES:

1. HORIZONTAL DATUM IS PARALLEL TO TRACK. WHERE TRACK IS SUPERELEVATED, DATUM IS NOT PARALLEL WITH GROUND.
2. CROSS SECTION GIVEN FOR STA. 0+00 IS A COMPOSITE FOR THE TUNNEL FROM STA. 0+00 THROUGH 0+50. ALL OF THE SECTIONS FOLLOW THIS CONVENTION.

NOT FOR CONSTRUCTION

SCALE: 1"=100'

50 0 100 200 300

Hatch Mott MacDonald

NORFOLK SOUTHERN

OWNING COMPANY
VIRGINIA
OPERATING DIVISION
OFFICE OF THE CHIEF ENGINEER - DESIGN AND CONSTRUCTION - ATLANTA, GA

REV	BY	DATE	DESCRIPTION
P1	DJL	8/5/05	PRELIMINARY ENGINEERING PHASE REPORT

LOCATION: COWAN TUNNEL, COWAN, VA

TITLE: TUNNEL CLEARANCE CROSS SECTIONS – 2 OF 7

DGN | PTD No.: 15427 & 15428 | VRN | MILE POST N-305.43
DWN | FILE No. | DRAWING NUMBER
CHK | DATE APRIL 1, 2005

FILE NAME = $FILE$
DATE/TIME = $DATE$ $TIME$

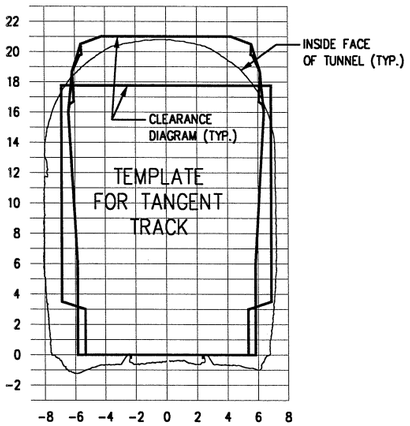

10+02

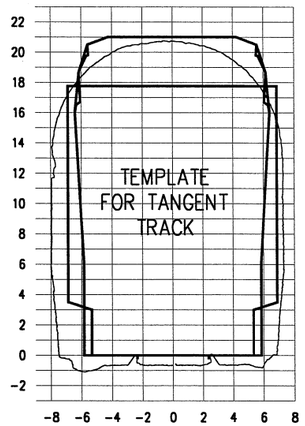

11+01

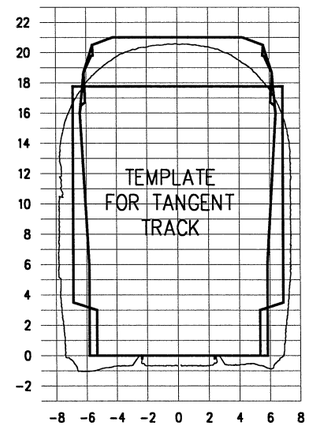

12+01

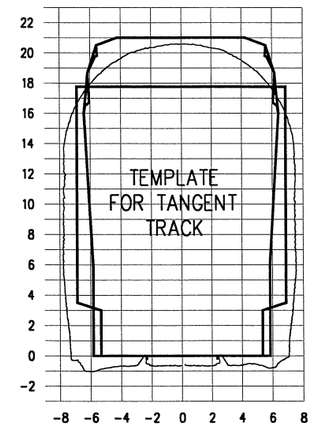

13+01

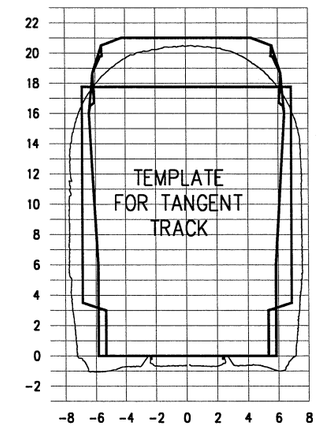

14+02

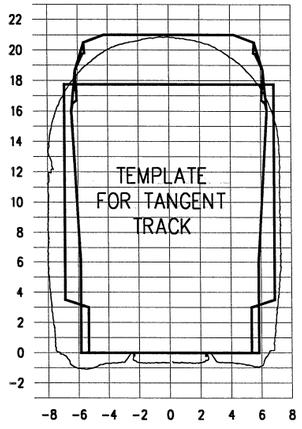

10+52

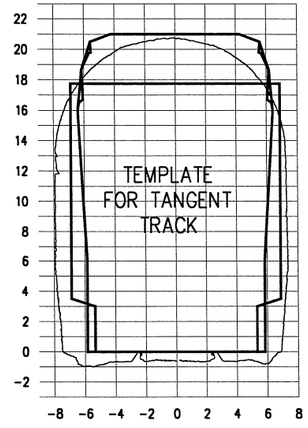

11+53

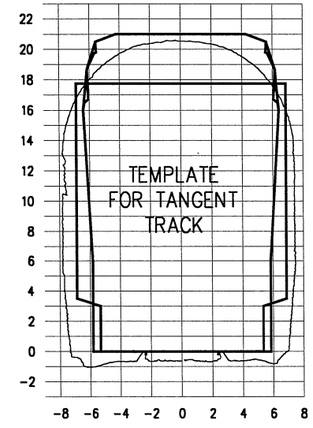

12+51

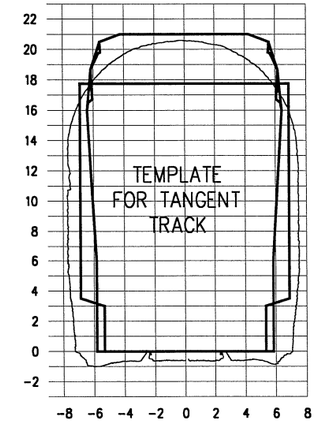

13+51

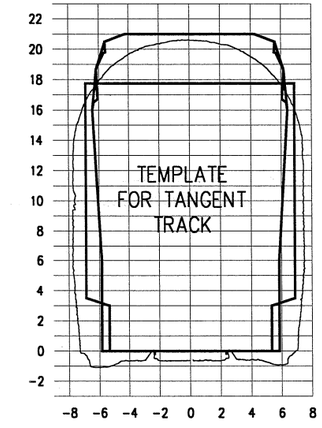

14+52

NOTES:

1. HORIZONTAL DATUM IS PARALLEL TO TRACK. WHERE TRACK IS SUPERELEVATED, DATUM IS NOT PARALLEL WITH GROUND.
2. CROSS SECTION GIVEN FOR STA. 0+00 IS A COMPOSITE FOR THE TUNNEL FROM STA. 0+00 THROUGH 0+50. ALL OF THE SECTIONS FOLLOW THIS CONVENTION.

NOT FOR CONSTRUCTION

SCALE: 1"=100'

50 0 100 200 300

Hatch Mott MacDonald

NORFOLK SOUTHERN

OWNING COMPANY
VIRGINIA
OPERATING DIVISION
OFFICE OF THE CHIEF ENGINEER - DESIGN AND CONSTRUCTION - ATLANTA, GA.

REV	BY	DATE	DESCRIPTION
P1	DJL	8/5/05	PRELIMINARY ENGINEERING PHASE REPORT

LOCATION: COWAN TUNNEL, COWAN, VA

TITLE: TUNNEL CLEARANCE CROSS SECTIONS – 3 OF 7

DGN | PID No. | VRN 15427 & 15428 | MILE POST N-305.43
DWN | FILE No. | DRAWING NUMBER
CHK | DATE APRIL 1, 2005

FILE NAME = $FILE$
DATE/TIME = $DATE$ $TIME$

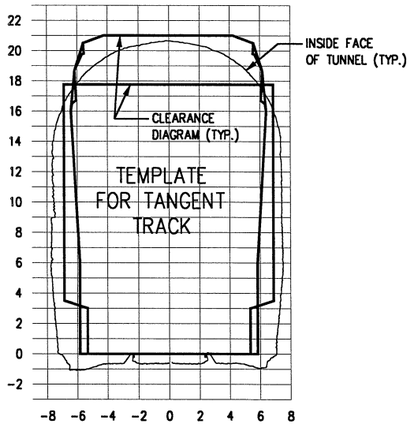

15+01

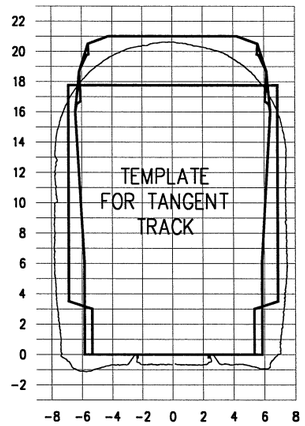

16+01

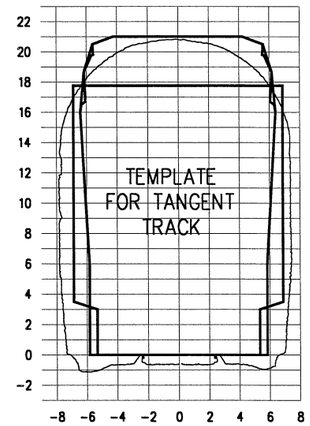

17+03

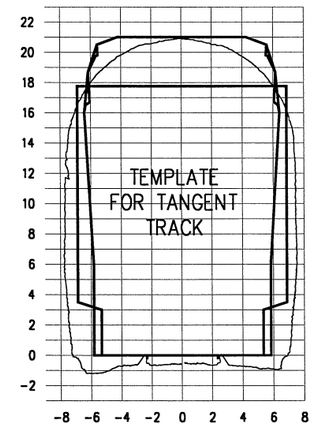

18+01

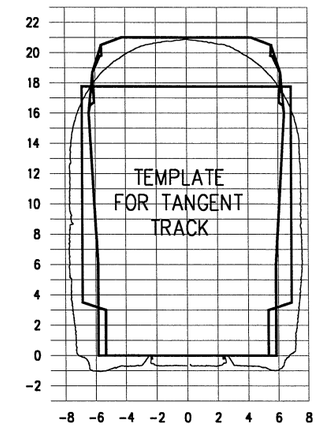

19+01

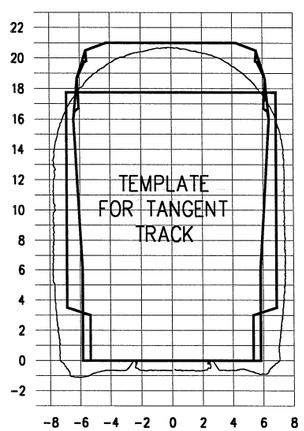

15+52

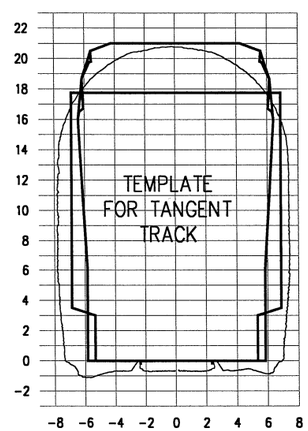

16+52

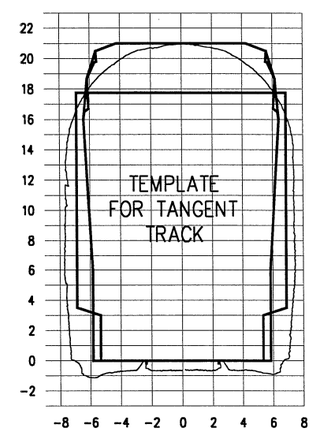

17+53

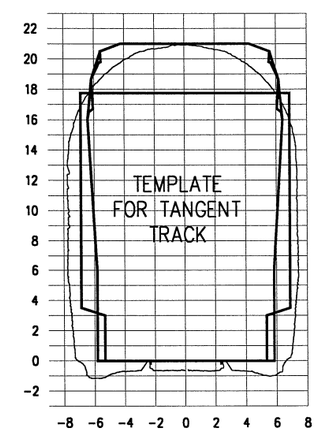

18+52

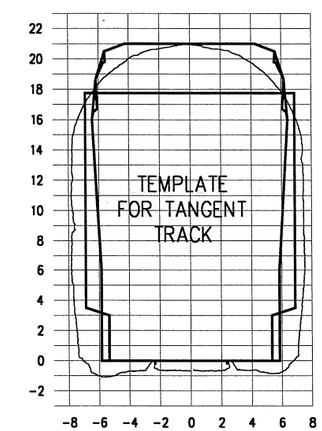

19+50

NOTES:

1. HORIZONTAL DATUM IS PARALLEL TO TRACK. WHERE TRACK IS SUPERELEVATED, DATUM IS NOT PARALLEL WITH GROUND.
2. CROSS SECTION GIVEN FOR STA. 0+00 IS A COMPOSITE FOR THE TUNNEL FROM STA. 0+00 THROUGH 0+50. ALL OF THE SECTIONS FOLLOW THIS CONVENTION.

NOT FOR CONSTRUCTION

SCALE: 1"=100'

50 0 100 200 300

Hatch Mott MacDonald

NORFOLK SOUTHERN

OWNING COMPANY
VIRGINIA
OPERATING DIVISION
OFFICE OF THE CHIEF ENGINEER - DESIGN AND CONSTRUCTION - ATLANTA, GA.

REV. BY	DATE	DESCRIPTION
PI	DJL	8/5/05	PRELIMINARY ENGINEERING PHASE REPORT

LOCATION: COWAN TUNNEL, COWAN, VA

TITLE: TUNNEL CLEARANCE CROSS SECTIONS – 4 OF 7

DGN | PID No. | VAN: 15427 & 15428 | MILE POST: N-305.43
DWN | FILE No. | DRAWING NUMBER
CHK | DATE: APRIL 1, 2005

FILE NAME = $FILE$
DATE/TIME = $DATE$ $TIME$

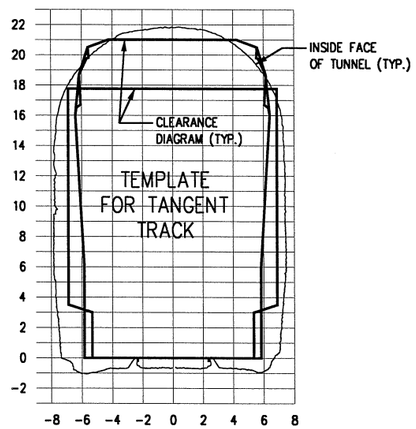

20+02

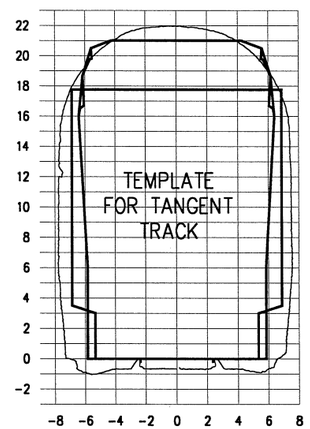

21+00

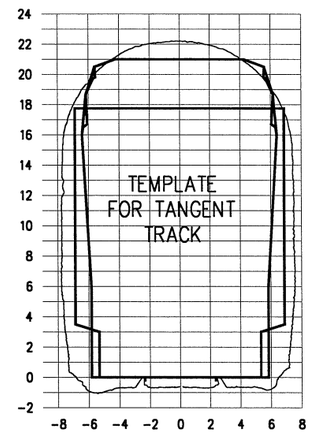

22+02

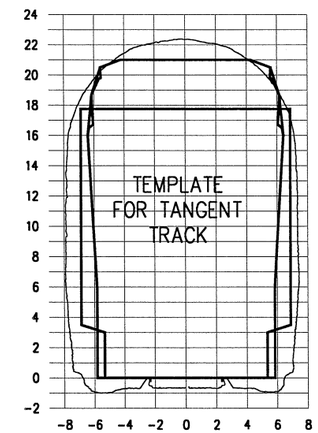

23+03

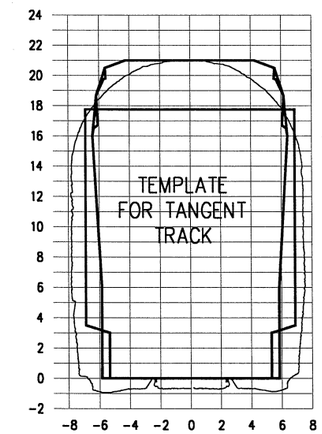

24+01

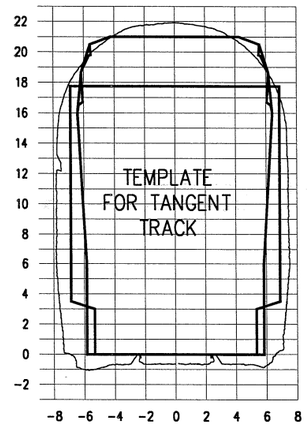

20+53

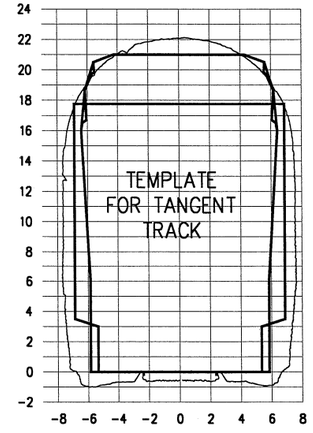

21+50

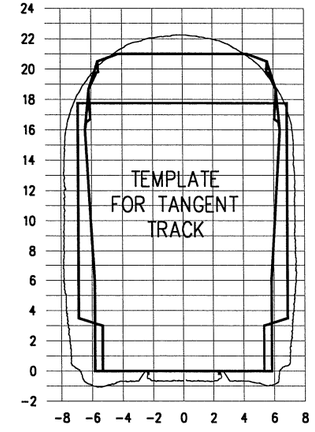

22+50

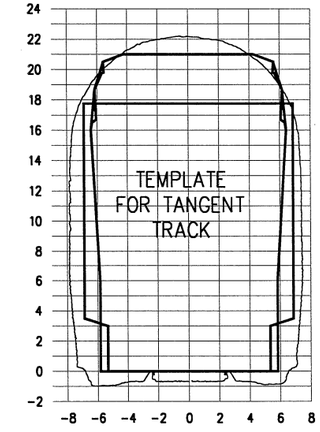

23+53

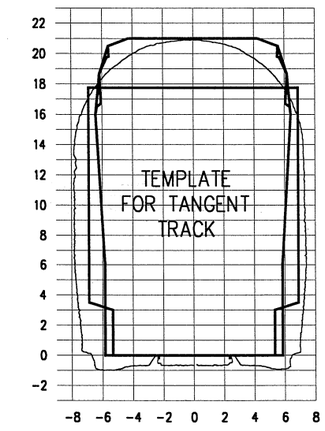

24+51

NOTES:

1. HORIZONTAL DATUM IS PARALLEL TO TRACK. WHERE TRACK IS SUPERELEVATED, DATUM IS NOT PARALLEL WITH GROUND.

2. CROSS SECTION GIVEN FOR STA. 0+00 IS A COMPOSITE FOR THE TUNNEL FROM STA. 0+00 THROUGH 0+50. ALL OF THE SECTIONS FOLLOW THIS CONVENTION.

NOT FOR CONSTRUCTION

SCALE: 1" = 100'

50 0 100 200 300

Hatch Mott MacDonald

NORFOLK SOUTHERN

OWNING COMPANY
VIRGINIA
OPERATING DIVISION
OFFICE OF THE CHIEF ENGINEER - DESIGN AND CONSTRUCTION - ATLANTA, GA.

REV	BY	DATE	DESCRIPTION
P1	DJL	8/5/05	PRELIMINARY ENGINEERING PHASE REPORT

LOCATION: COWAN TUNNEL, COWAN, VA

TITLE: TUNNEL CLEARANCE CROSS SECTIONS – 5 OF 7

DGN | PID No. | FIN 15427 & 15428 | MILE POST N-305.43

DWN | FILE No. | DRAWING NUMBER

CHK | DATE APRIL 1, 2005

FILE NAME = $FILE$
DATE/TIME = $DATE$ $TIME$

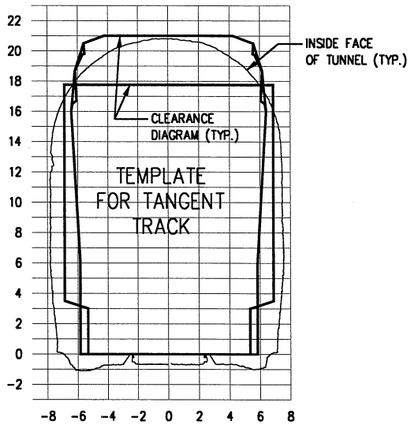

25+02

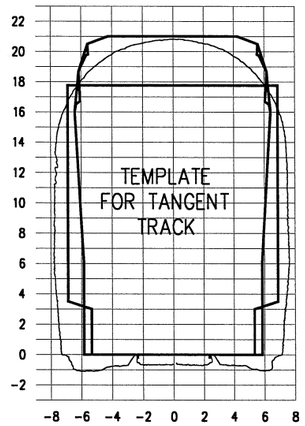

26+00

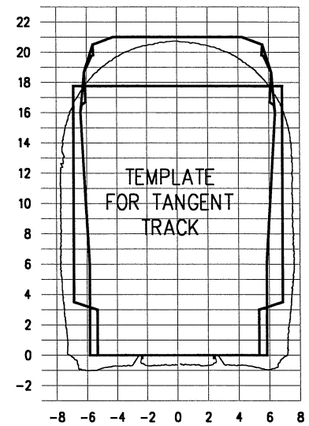

27+03

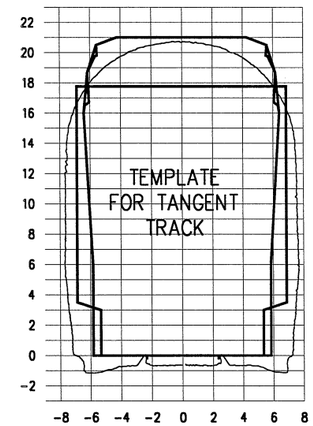

28+02

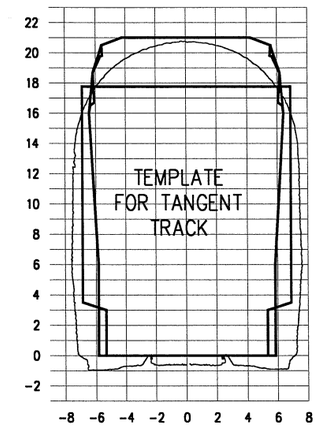

29+00

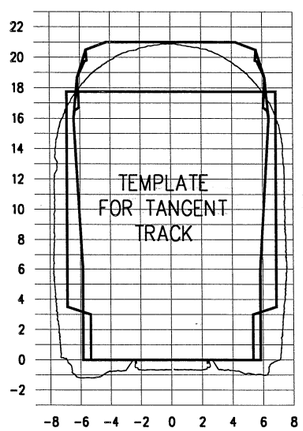

25+50

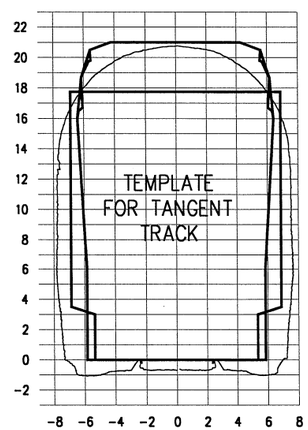

26+53

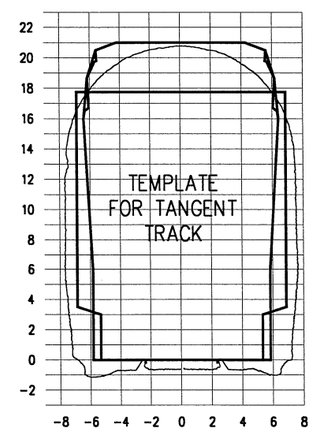

27+52

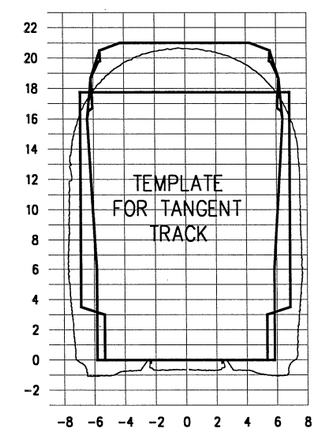

28+50

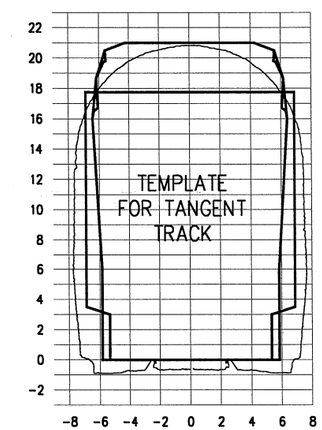

29+50

NOTES:

1. HORIZONTAL DATUM IS PARALLEL TO TRACK. WHERE TRACK IS SUPERELEVATED, DATUM IS NOT PARALLEL WITH GROUND.
2. CROSS SECTION GIVEN FOR STA. 0+00 IS A COMPOSITE FOR THE TUNNEL FROM STA. 0+00 THROUGH 0+50. ALL OF THE SECTIONS FOLLOW THIS CONVENTION.

NOT FOR CONSTRUCTION

SCALE: 1"=100'

50 0 100 200 300

Hatch Mott MacDonald

NORFOLK SOUTHERN

OWNING COMPANY
VIRGINIA
OPERATING DIVISION
OFFICE OF THE CHIEF ENGINEER - DESIGN AND CONSTRUCTION - ATLANTA, GA.

REV.	BY	DATE	DESCRIPTION
P1	DJL	8/5/05	PRELIMINARY ENGINEERING PHASE REPORT

LOCATION: COWAN TUNNEL, COWAN, VA

TITLE: TUNNEL CLEARANCE CROSS SECTIONS – 6 OF 7

DGN	PID No.	VAN 15427 & 15428	MILE POST N-305.43
DWN	FILE No.		DRAWING NUMBER
CHK	DATE APRIL 1, 2005		

FILE NAME = $FILE$
DATE/TIME = $DATE$ $TIME$

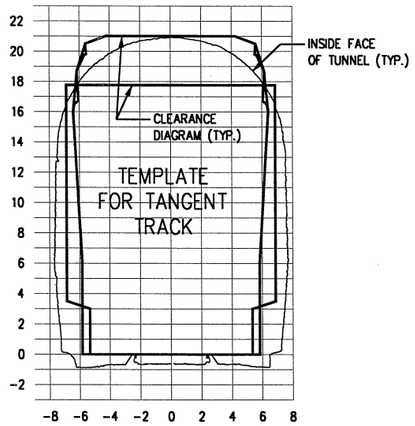

30+05

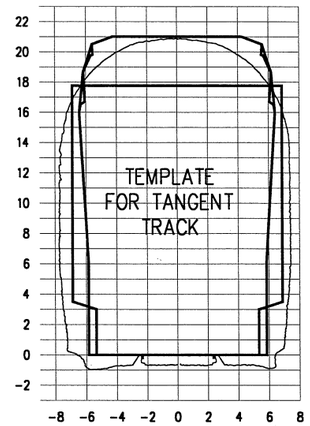

31+05

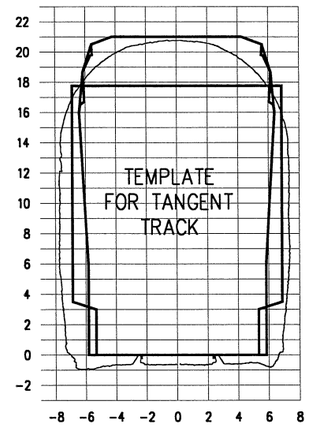

32+00

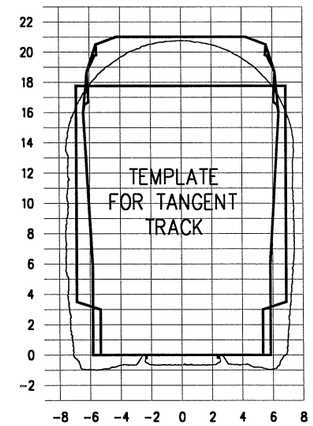

33+00

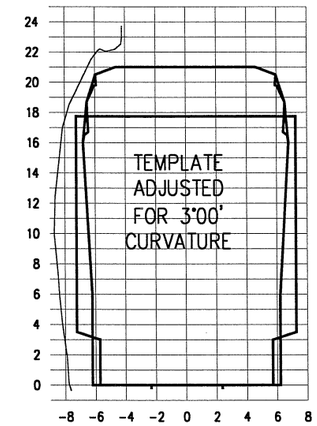

33+66
WEST PORTAL

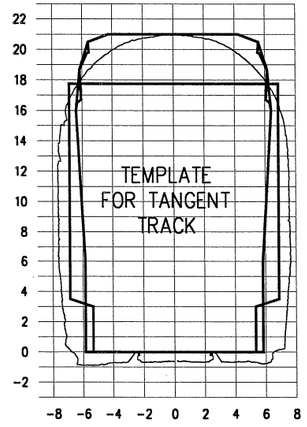

30+53

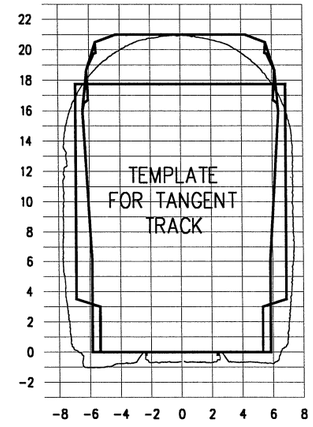

31+52

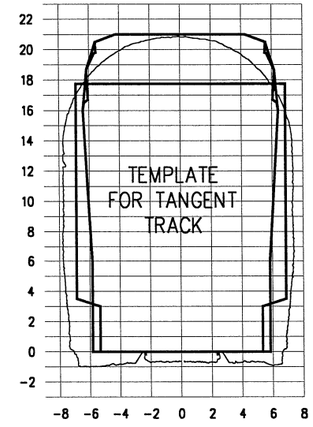

32+50

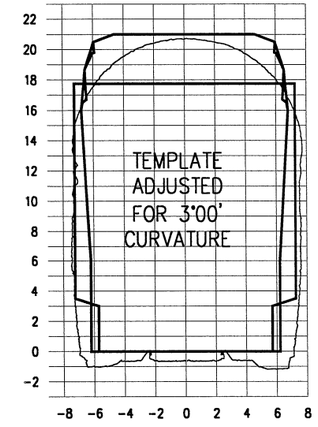

33+51

NOTES:

1. HORIZONTAL DATUM IS PARALLEL TO TRACK. WHERE TRACK IS SUPERELEVATED, DATUM IS NOT PARALLEL WITH GROUND.
2. CROSS SECTION GIVEN FOR STA. 0+00 IS A COMPOSITE FOR THE TUNNEL FROM STA. 0+00 THROUGH 0+50. ALL OF THE SECTIONS FOLLOW THIS CONVENTION.

NOT FOR CONSTRUCTION

SCALE: 1"=100'

50 0 100 200 300

Hatch Mott MacDonald

NORFOLK SOUTHERN

OWNING COMPANY
VIRGINIA
OPERATING DIVISION
OFFICE OF THE CHIEF ENGINEER - DESIGN AND CONSTRUCTION - ATLANTA, GA.

REV	BY	DATE	DESCRIPTION
P1	DJL	8/5/05	PRELIMINARY ENGINEERING PHASE REPORT

LOCATION: COWAN TUNNEL, COWAN, VA

TITLE: TUNNEL CLEARANCE CROSS SECTIONS - 7 OF 7

DGN | PID No. | VRN 15427 & 15428 | MILE POST N-305.43
DWN | FILE No. | DRAWING NUMBER
CHK | DATE APRIL 1, 2005

FILE NAME = $FILE$
DATE/TIME = $DATE$ $TIME$

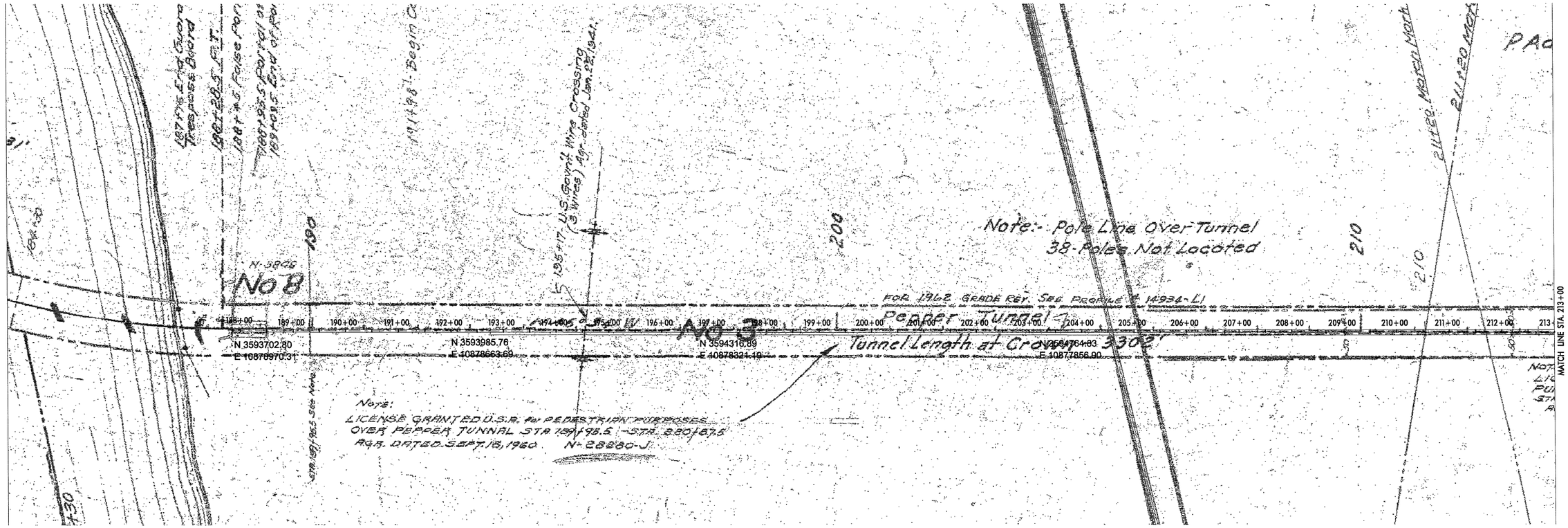

COWAN PLAN

SCALE: 1"=100'

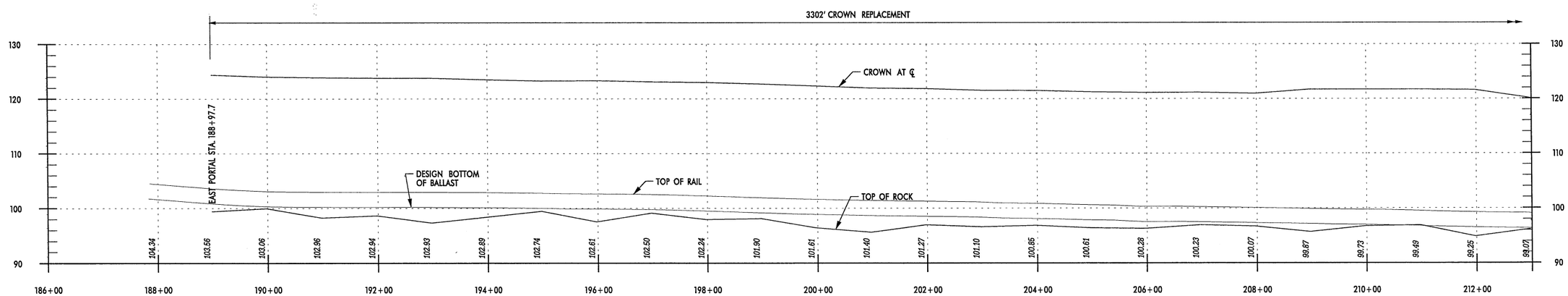

COWAN PROFILE

SCALE: 1"=100' HORIZ.
1"=10' VERT.

NOT FOR CONSTRUCTION

SCALE: 1"=100'

50 0 100 200 300

Hatch Mott MacDonald

NORFOLK SOUTHERN

OWNING COMPANY
VIRGINIA
OPERATING DIVISION
OFFICE OF THE CHIEF ENGINEER - DESIGN AND CONSTRUCTION - ATLANTA, GA.

REV	BY	DATE	DESCRIPTION
P2	DJL	10/14/05	PRELIMINARY ENGINEERING PHASE REPORT
P1	DJL	8/5/05	PRELIMINARY ENGINEERING PHASE REPORT

LOCATION: COWAN TUNNEL, COWAN, VA

TITLE: PLAN AND PROFILE
SHEET 1 OF 2

DGN	PID No.	VIN 15427 & 15428	MILE POST 305.43
DWN	FILE No.		DRAWING NUMBER
CHK	DATE APRIL 1, 2005		

FILE NAME = P:\NSRN\293939\CAD\survey info\305.43 Cowan\cowan1.dgn
DATE/TIME = 10/12/2005 - 02:31:18 PM

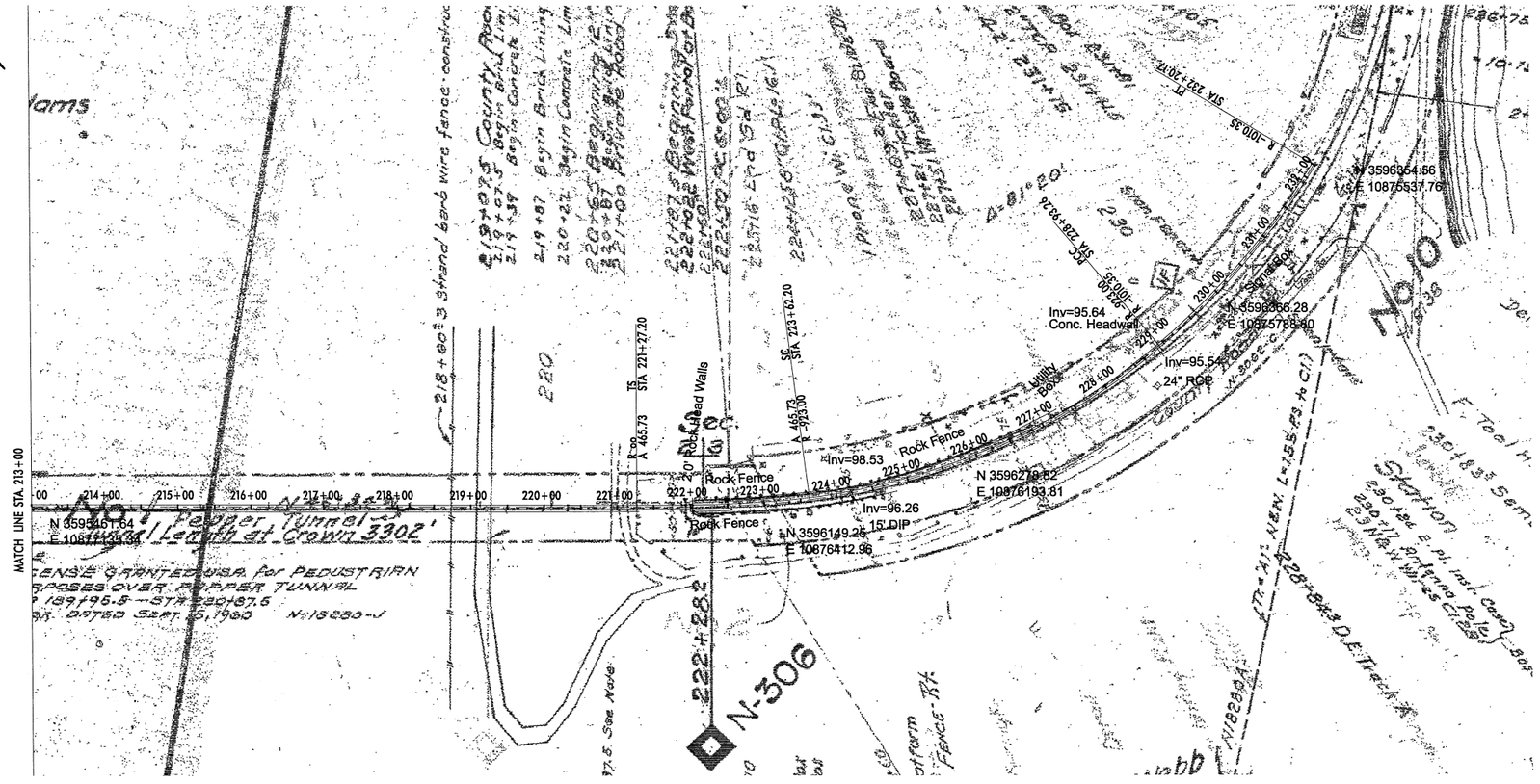

COWAN PLAN

SCALE: 1"=100'

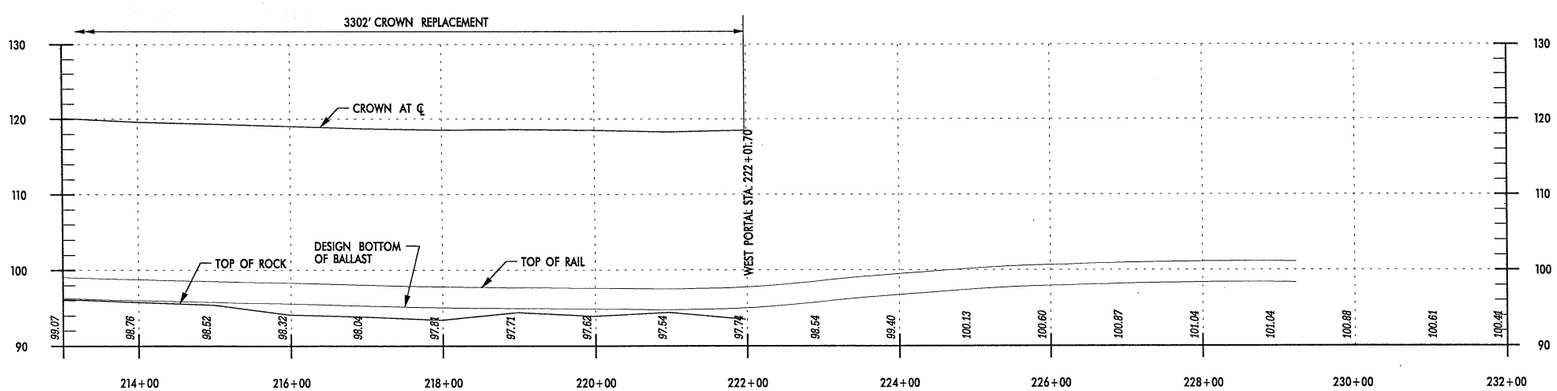

COWAN PROFILE

SCALE: 1"=100' HORIZ.
1"=10' VERT.

COWAN CURVE DATA

Description:
Horizontal Alignment Name: 6
Description:
Style: default

	STATION	NORTHING	EASTING
Element: Linear			
POB ( )	187+85.53	3593689.53	10878970.41
TS ( )	221+27.20	3596010.59	10876566.36
Tangent Direction:	313°59' 38"		
Tangent Length:	3341.6729		
Element: Clothoid			
TS ( )	221+27.20	3596010.59	10876566.36
SPI ( )	222+84.00	3596119.51	10876453.56
SC ( )	223+62.20	3596166.39	10876390.65
Entrance Radius:	0.0000		
Exit Radius:	923.0000		
Length:	235.0000		
Angle:	7°17' 38" Left		
Constant:	465.7306		
Long Tangent:	156.7999		
Short Tangent:	78.4544		
Long Chord:	234.8308		
Xs:	234.6194		
Ys:	9.9605		
P:	2.4916		
K:	117.4366		
Tangent Direction:	313°59' 38"		
Radial Direction:	43°59' 38"		
Chord Direction:	311°33' 46"		
Radial Direction:	36°42' 00"		
Tangent Direction:	306°42' 00"		
Element: Circular			
SC ( )	223+62.20	3596166.39	10876390.65
PI ( )	226+35.45	3596329.69	10876171.57
CC ( )		3595426.35	10875839.05
PCC ( )	228+93.26	3596347.41	10875898.90
Radius:	923.0000		
Delta:	32°58' 55" Left		
Degree of Curvature(Chord):	6°12' 38"		
Length:	531.3207		
Length(Chorded):	531.0606		
Tangent:	273.2478		
Chord:	524.0151		
Middle Ordinate:	37.9683		
External:	39.5972		
Tangent Direction:	306°42' 00"		
Radial Direction:	36°42' 00"		
Chord Direction:	290°12' 32"		
Radial Direction:	3°43' 04"		
Tangent Direction:	273°43' 04"		
Element: Circular			
PCC ( )	228+93.26	3596347.41	10875898.90
PI ( )	230+58.22	3596358.11	10875734.28
CC ( )		3595339.19	10875833.38
PT ( )	232+20.17	3596315.89	10875574.82
Radius:	1010.3481		
Delta:	18°32' 45" Left		
Degree of Curvature(Chord):	5°40' 24"		
Length:	327.0361		
Length(Chorded):	326.9025		
Tangent:	164.9609		
Chord:	325.6103		
Middle Ordinate:	13.2033		
External:	13.3781		
Tangent Direction:	273°43' 04"		
Radial Direction:	3°43' 04"		
Chord Direction:	264°26' 42"		
Radial Direction:	345°10' 19"		
Tangent Direction:	255°10' 19"		

NOT FOR CONSTRUCTION

SCALE: 1"=100'

50 0 100 200 300

REV	BY	DATE	DESCRIPTION
P2	DJL	101405	PRELIMINARY ENGINEERING PHASE REPORT
P1	DJL	8505	PRELIMINARY ENGINEERING PHASE REPORT

Hatch Mott MacDonald

NORFOLK SOUTHERN

OWNING COMPANY
VIRGINIA
OPERATING DIVISION
OFFICE OF THE CHIEF ENGINEER - DESIGN AND CONSTRUCTION - ATLANTA, GA

LOCATION: COWAN TUNNEL, COWAN, VA

TITLE: PLAN AND PROFILE
SHEET 2 OF 2

DGN	PID No.	VRN	15427 & 15428	MILE POST	305.43
DWN	FILE No.			DRAWING NUMBER	
CHK	DATE	APRIL 1, 2005			

FILE NAME = P:\NSR\29395\CAD\survey info\305.43 Cowan\cowan-2.dgn
DATE/TIME = 10/12/2005 02:05:06 PM

This map was not prepared or intended for use as a real estate title map. The railway company does not represent or suggest that the property lines and right-of-way lines shown on the map are accurate or that any other information on the map is correct. The company does not represent that it has checked this map for accuracy.

SCHEDULE OF PROPERTY

No.	Grantor	Grantee	Instrument	Date	Record	Cust.No.	Remarks
1	Mary J S Kerbridge, et al.	N&W Ry Co	Deed	Feby 21,1899 DB 46 555 Mar 15,1899		571-A	CONDITIONS
2	H C Barnett and wife,	"	"	Feby 21,1899 DB 46 558 Mar 11,1899		572	CONDITIONS
3	Margaret E Cowan & Husb.	"	"	Mar 26,1899 DB 19 566 Dec 1,1899		573	11 474
4	R P Kerbridge,	"	Condemned	Apr 20,1900 DB 20 589 Apr 20,1900			18 254 CONDITIONS
5	Mary J. S Kerbridge,	"	"	July 26,1900 DB 47 277 July 26,1900		641-E	18 525
6	A I Harless, Commr. for	"	Deed	Dec 11,1916 DB 56 79 Dec 20,1916		571-C	49 409
	R P Kerbridge,						
7	A I Harless, Commr. for	"	Deed	July 27,1917 DB 67 56 Nov 16,1916		571-D	52 5
	R P Kerbridge, et al.						
	Fred M Einstein,	"	Release	Nov 11,1917		530	51 74
	Fred M Einstein,	"					53 478
	Fred M Einstein,	"	Agreement	Feby 16,1916 DB 34 599 Feby 26,1916			47 183
8	Elizabeth E Adams & Husb	"	Deed	Apr 15,1916 DB 37 398 Oct 25,1916		536	51 134
	Elizabeth E Adams & Husb.et al	"	"	May 15,1916 DB 37 210 Sept 9,1916		536	51 174

Location	Changes Made	Plan No.	Additions C.E.P.	Retirements C.E.P.	Construction Order	Total
	Police Station Building	V-4874			PA 6703	371 2/1923
	" Tool House				WV 1500	293.1/1923
	" Section House				WV 1478	481 2/1923
	Coast Shelter Shed		WV 2700	560 8/1925		
101+1.83	Extend R.R. L.W.		RA 10930	723 2/1926		
104+50.0 R.L.	Relocate Back Coal Chute (Wooden) Coal Bridge, Tank Tr. Tow Mast, etc. Re-Install Water Pipe & Hydrants				PA 10.10	1926
105+25.5	West Side of Main Track Set Up Water Tank Tower, Water Pipe & Hydrant Relocated Main Track					
105+25.5	Water Line					
176+50.0 R.L.	Coaling Station To Shelter Dimensions 40'x-70'x = 1800 ft		RA 10949	1945		
211+47	Water Tank Relocated and Water Line Re-Laid, Re-Set Water Tank Tower and Bracing Wk.					
	Track Scale Pit Relocated Re-Set Scale Beam Re-Set Scale Beam		RA 10949		1945	PA 10.10
	Track Pit, Re-Set Scale Pit Relocated Re-Set Scale Beam Re-Set Scale Beam Re-Set Scale Beam		RA 10949		1945	PA 10.10
	Condemned State Detector Removed		RA 13013		1949	
188+45.5	Install 24" Cul. Pipe L. 42.1		RA 14.17		1957	
188+45.5	Test Pier & Piers Pl. At Fence Tower					PA 16.7861	1961
176+62.5	Rel. 11/1937 of N.R. Main Track.	V-8716				PA 16.7751	1962
105+00	Installed Emergency Cross Over Switch Stand Set Up Switch Stand Set Up	V-4.66					
105+25.4	Water Pipe Re-Laid						
105+25.4	Water Pipe Re-Laid						

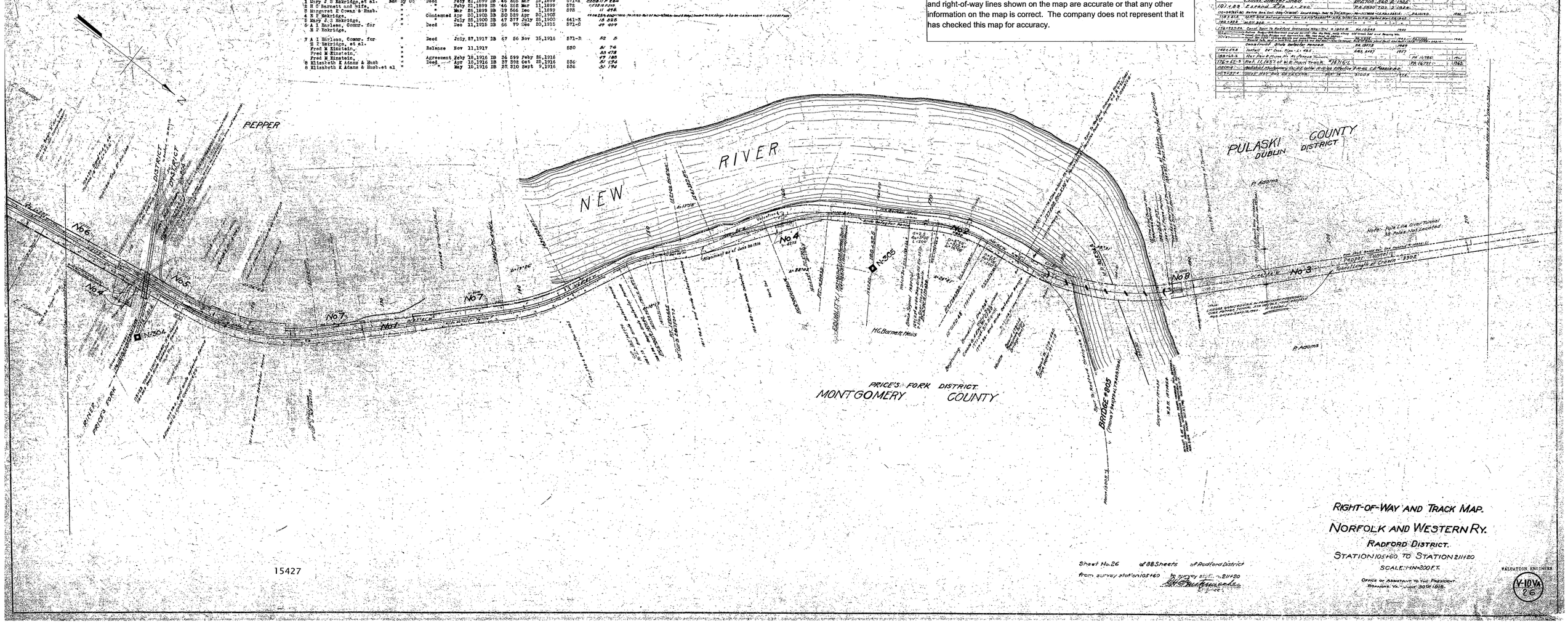

RIGHT-OF-WAY AND TRACK MAP.

NORFOLK AND WESTERN RY.

RADFORD DISTRICT.

STATION 105+60 TO STATION 211+80

SCALE: 1 IN = 200 F.T.

OFFICE OF ASSISTANT TO THE PRESIDENT.
ROANOKE, VA., JUNE 30TH 1918.

Sheet No. 26 of 88 Sheets of Radford District
From survey station 105+60 to survey station 211+80

VALUATION ENGINEER
V-10 Va 26

15427

Location	Changes Made	Plan No.	Additions				Retirements			
	Conc. Lining Pepper Tunnel - Bldgs.		PA.2570	54	1	1919	PA.2570	54	1	1919
	Ret. 399' Track "A" & 789' Track "B"						VP.3764	482	1	1919
	Const. R/W Fence		PA.4142	356	2	1920				
	Retire Camp Bldg. & Toilet						VP.1057	242	1	1922
	Extend Station Siding "A"		VP.2768	25	1	1926				
	Retire Two Xovers						PA.7990	897	2	1929
	Install 130# Guard Rail		V.P.4909	496	2	1929				
306+32	Retire Tk. Wh. L=196'						P.A.5418	448	2	1922
	New T.O. E.B. Main - New P.S. Tk. A (Mile 6)		P.A.5890	701	2	1924				
246+65	Install 36' of 24" C.I.P.	CE File #48047-G-Sur. Notes 7-5-34 - See N&W Letter CEA 7-13-34	V.P.6870		1	1934				
315+52-Lt.	Addn. to Sec. Form No. #N-3078 - MW108 In Let. File #63989		V.P.8181		1	1937				
222+28.2	M.P. No. 306 set on ground - See C.E. Letter File #30850 - N.W.B. letter to W.P.W. Dated Mar. 23, 1942									
271+32.8	M.P. No. 307 " " " " "		"	"	"	"	"	"	"	
324+720	M.P. No. 308 " " " " "		"	"	"	"	"	"	"	
235+60.2 - P.S.	Const. Tr. "X1" - Hercules Pwd. Co. Connection - Record Pr. (N16280A) and MW38 in C.E. File #64528-C - See N&W Let. 6-6-42		V.P.10201			1941				
237+45 (20 Rt.)	Retire Stock Pens - Bldg. #N3082A - MW.108 date 8-6-42 in C.E. File #62842-G						V.P.10737			1942
243+08 284+84	Construct Slide Detector Fence	N-20640	P.A.12073		1	1946	on file #60887			
305+14.4	Construct 550 Gal. Oil Stge. Tank for Winter King Switch Heaters		V.P.12206			1948				
240+45.815	Retire 150' Trk. A (Stock Pen Sdg.) L=1011'						V.P.13759			1952
316+32	Retire Bldg. - N-3078 & Outbuildings	N-26388					V.P.R.14927			1956
307+30	Const. Conc. Wall	Y-11646	P.A.14220			1958				
Cowan	Install Switch Point Derail Tk. "B"		P.A.17966			1970				
15. 315+30	Relocation of Tk. "A" L=429'	SCE-14								
262+02 W-End	Install Slide Detector Fence (W. End Pepper Tunnel)	SCE-160	AFE-31059							
230+77	Installation of Wayside Radio Base Station	SCE 282-3	A.F.E.31007			1975				
305+20	Retire Bldg. N-3076 and N-3076-A									1984
309+23.5 P.S.	Extend Trk. "A" 177' [illegible]	[illegible]	AFE 31252			1987				
235+10	Retire Interlocking Tower N-3052-[illegible]						AFE 31176			1991

This map was not prepared or intended for use as a real estate title map. The railway company does not represent or suggest that the property lines and right-of-way lines shown on the map are accurate or that any other information on the map is correct. The company does not represent that it has checked this map for accuracy.

SCHEDULE OF PROPERTY

NO.	Grantor	Grantee	Instrument	Date	Record			Cust. No.	Remarks
1	Margaret K Cowan & Husb.	N&W Ry Co	Deed	Mar 26,1899	DB 19 566	Dec 1,1899		573	CEDB 11 P 473
2	Wm A Helvey and wife,	"	"	Mar 17,1899	DB 19 245	Mar 27,1899		574	11 444
3	Joseph Cloyd Kent,	"	"	Jany 15,1900	DB 20 53	Feby 20,1900		575	13 181
#4	Eliza A. Caldwell,	"	"	Mar 29,1899	DB 19 269	Apr 4,1899		576	11 447
5	J E Snider and wife,	"	"	Mar 14,1899	DB 19 338	May 11,1899		577	11 429
6	Geo L Croy and wife,	"	"	Mar 14,1899	DB 19 325	May 11,1899		578	11 450
7	E J Yingling and wife,	"	"	Feby 21,1899	DB 19 290	Apr 14,1899		579	11 436
8	Elinor M Harris and Husb.	"	"	Dec 11,1899	DB 19 585	Dec 18,1899		580	13 80
9	W C Brown and wife and R A Brown and wife,	"	"	Feby 21,1899	DB 19 216	Mar 14,1899		581	11 439
10	J W Flanagan, et al.	"	"	Sept 4,1909	DB 28 498	Sept 22,1909		575-A	35 497
11	J E Snyder and wife,	"	"	Sept 20,1915	DB 36 339	Oct 16,1915			DB 41 P 178 / This Agmt. Canceled Oct 1916 - See Agmt And Letter With Same - Land Retired 1938 (Unauthorized)
~~12~~	~~J C Calhoun,~~		~~Agreement~~	~~Sept 17,1915~~	~~DB~~				~~Agreement Book 45 page 180~~
13	O K Kirkwood, et al.	"	Deed	Sept 20,1915	DB 36 334	Oct 12,1915			49 42
14	W C Brown and wife and R A Brown and wife,	"	"	Nov 25,1901	DB 21 264	Nov 29,1901		581-A	12 337 PART PCL. 14 CONV. TO LORA H. WORRELL DEED DATED APR. 20, 1981 DB 361 PG 170 CUST. NO. NW 8
#4	Chas E Caldwell,								
15	G S Williams & Wife,	"	"	Sept 14,1916	DB 37 325	Sept 19,1916		537	13 229 Plan N4068, CE-DB 51, Pg. 345 - Acq'd. PA 646
16	E W Testerman, et al.	"	"	Jany 3,1917	DB 37 511	Jany 12,1917		538	" N4291 " " 52 " 14 " " " "
17	E. C. Croy	"	Easement	Oct. 22, 1929	DB 62 215	Nov. 18, 1929		575B	CE DB 73, Pg. 289, Plan N18833 - PA 7733 - Transmn. Line

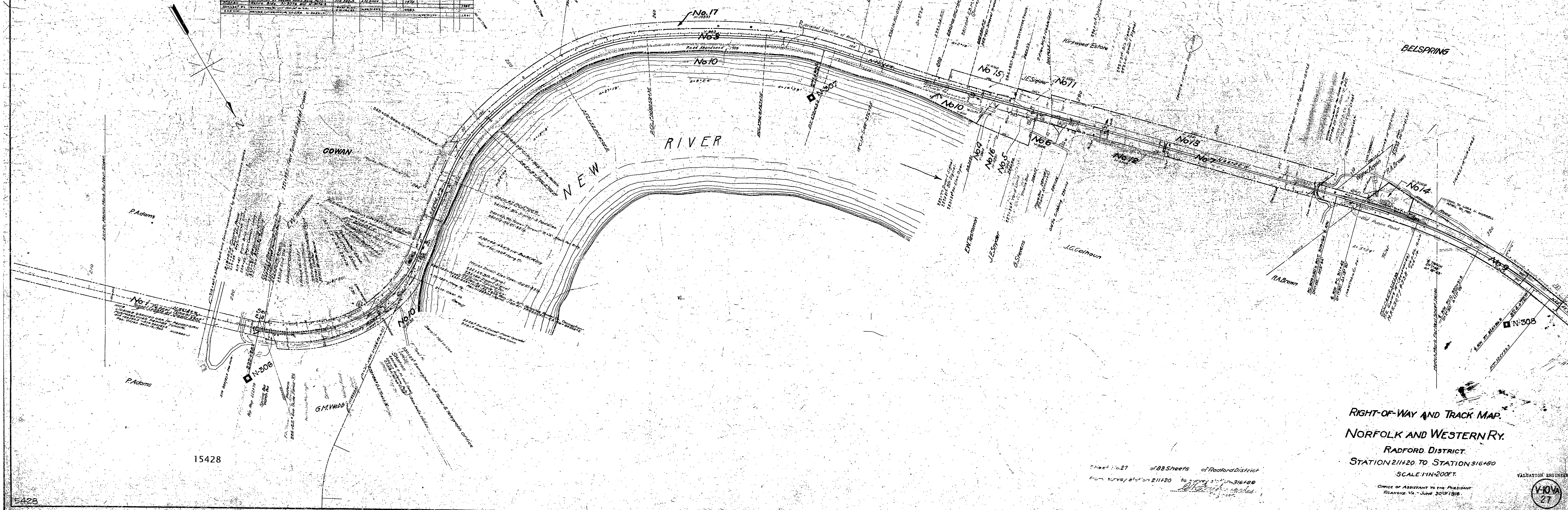

15428

5428

RIGHT-OF-WAY AND TRACK MAP.

NORFOLK AND WESTERN RY.

RADFORD DISTRICT.

STATION 211+20 TO STATION 316+80

SCALE: 1 IN = 200 FT.

OFFICE OF ASSISTANT TO THE PRESIDENT
ROANOKE, VA. - JUNE 30TH 1916.

Sheet No. 27 of 88 Sheets of Radford District

From survey station 211+20 to survey station 316+80

[signature]
Engineer

VALUATION ENGINEER

V-10 VA.
27