Heartland Corridor, Walton Virginia to Columbus Ohio

Preliminary Engineering Phase Report

Eggleston
No. 1
MP N316.15

October 14, 2005, Rev. 2

Hatch Mott MacDonald

Preliminary Engineering Phase Report

October 14, 2005

Norfolk Southern Railway
Heartland Corridor, Walton VA to Columbus OH

Eggleston No. 1 Tunnel – MP N316.15

Statistics: Virginia Division
Double-width tunnel for Main #1
Length = 925'
Concrete walls and crown
Degree of Curvature = 7.8 LT (per Track Chart)
Superelevation = 3.5" (per Track Chart)

1. EXISTING CONDITIONS 2

2. CLEARANCE IMPROVEMENT ALTERNATIVES 4

3. PREFERRED ALTERNATIVE 5

4. USGS TOPOGRAPHIC MAP 9

5. AERIAL PHOTO 10

6. TRACK CHART 11

7. PHOTOS 12

8. ESTIMATE 14

9. DRAWINGS 16

Existing Tunnel Clearance Cross Sections

Proposed Tunnel Clearance Cross Sections

Plan and Profile

Valuation Map

1. EXISTING CONDITIONS

1.1 Background

Based on the Valuation Map (V-10VA/32) information:

- Some ROW on the line was acquired in 1875; therefore the original railroad through the valley was probably built then.
- The parcels containing a tunnel east of the present tunnel were acquired in 1881 & 1882. It is therefore suspected that the tunnel was constructed in 1882 or shortly afterwards.
- Parcels for a present tunnel to the west were acquired in 1902. It is therefore suspected that the tunnel was constructed in 1902 or shortly afterwards.
- There are 2 notes reflecting the installation of fences around cave-ins.
- The EB main track was retired in 1961. The 1882 tunnel was apparently abandoned.

Additional information on this tunnel was obtained from various sources such as topographic maps, aerial photos, inspection reports, track charts, and field investigations that were performed on March 9 and June 7, 2005.

1.2 General Area

The tunnel is located in a sparsely populated area with access along the right of way to both the east and west portals.

Access to the east and west portals is via the right of way access road through Eggleston No. 2 and Pembroke Tunnels on the west and along the railroad right of way on the east. The right of way road can be accessed near the Pembroke Tunnel at the intersection of Giles County Route 623 and Rocky Hollow Road or near the Eggleston No. 1 Tunnel at the intersection of Eggleston and River Roads in Eggleston.

1.3 Structural Conditions

The tunnel is 925’ long with a concrete lining and a nominal width of 30’. It was apparently originally constructed for 2 tracks. A slide fence circuit is mounted on the south wall.

The footing of the tunnel liner is visible along the right of way road at several locations. Significant undercutting could expose the footing further. The footing is 16.5” thick. The elevation of the bottom of the footing along the access road is 7” above the top of rail elevation.

1.4 Track

The track is of conventional design with wood crossties and a stone ballast section. The ballast is slightly fouled.

1.5 Geotechnical

The Virginia Division tunnels are located in the Valley and Ridge Physiographic Province, a region characterized by linear ridges and valleys formed by differential weathering of the rock. The description of the site geology is based on our observations of the rockmass at the portals and adjacent cuts and two Virginia Geologic Survey geologic reports: Geologic Map of Giles County, Virginia and Geology of the Appalachian Valley in Virginia. The tunnels themselves are lined and no rock was exposed.

The tunnel is excavated through medium- to thick-bedded dolomite of four formations collectively called "Lower Ordovician and Upper Cambrian Rocks". The topographic map of the site area show sinkholes present at the ground surface of the tunneled ridge within a few hundred feet of the tunnel alignment.

The beds dip 10 to 20 degrees to the southeast and the tunnel axis is sub-parallel to the bedding strike. According to the track flagman, rockfall has occurred near the "east" portal, most recently as a large block measuring tens of feet in size that spalled along bed and joint surfaces and fell onto the track. The height of the cliffs and cuts near the "west" portal are lower than at the "east" portal and the slopes are cut back further and at shallower grades.

An older abandoned and unlined railroad tunnel is located a few hundred feet east of the existing tunnel. The rockmass in the tunnel was similar to the rock exposed in the overlying bluffs. Through-going near-vertical joints were observed crossing the alignment of the older tunnel.

Based on discussions with the track flagman, who happened to grow up near the alignment, a third tunnel, now collapsed, was once located near the current tunnel. This tunnel collapsed and the depression created by the collapse was later used as a local dump.

The geoprobes within the tunnel indicate that the top of rock is located between 3.9' to 5.0' (averaging about 4.7') below the top of ballast throughout the tunnel. Top of ballast is typically about 0.8' below top of low rail. Geoprobes were also taken at 100' increments for 1000' outside of each portal. East of the tunnel, top of rock is located between 4.5' to 5.0' (averaging about 5.2') below the top of ballast. West of the tunnel, top of rock is located between 3.0' to 5.0' (averaging about 4.7') below the top of ballast, with all but one of the geoprobes reaching refusal between 4.0' to 5.0'. A sample of rock was taken from the portal and tested.

1.6 Clearances

The laser car measurements indicate that the existing tunnel has adequate horizontal clearances for the composite design template but that the "Double Stack" portion of the clearance envelope encroaches on the crown at the 1 o'clock position by 0"to 10", averaging about 4". Because of the access road, the track is located on the right side of the tunnel; the clearance could be adequate if the track were aligned closer to the center of the tunnel. Cross sections of the tunnel clearance encroachments are shown in the drawings at the end of this report. The vertical encroachments are summarized in the table below:

	Crown Encroachment (radial inches)	
Distance (ft) From East Portal	**Left Side**	**Right Side**
0	0	10
102	0	0
200	0	3
300	0	2
402	0	1
500	0	2
603	0	3
704	0	5
803	0	7
852	0	7

2. CLEARANCE IMPROVEMENT ALTERNATIVES

Given the magnitude of the vertical clearance deficiency, there are four general alternatives that can be used to obtain the clearance; notching the crown, shifting the track, lowering the track, or undercutting the track.

2.1 Notching the Crown

The depth of notch necessary to achieve the required clearance would not cut entirely through the liner at the 1 o'clock position. Depending on the exact depth of the notch, either the minor notching or deep notching method would be utilized through the tunnel on the right side only. The remainder of the existing crown will not need to be modified to clear. The valuation map shows two cave in areas above the crown of the tunnel that would seem to indicate potentially unstable ground conditions above the crown.

2.2 Shifting the Track

Shifting the track towards the center of the curve would appear to provide the required clearance. Shifting the track inward would eliminate the existing right of way road, but would reduce the curvature slightly. The inward shift would also provide some additional room for surfacing since the track would shift down the superelevation.

Shifting track inward on a curve is typically problematic, however with several gaps cut into the welded rail that would then be re-welded after the shift, we feel that the inward shift could be accomplished within a reasonable work window.

2.3 Lowering the Track

Excavation would involve removing the track and using conventional earth moving equipment to remove the ballast and subgrade materials. The entire operation would require approximately a 4-day outage and continuous work to remove the track, excavate the subgrade, and restore the track. The double track width of the tunnel will allow trucks to pass each other. New drainage installation and subgrade stabilization could be accomplished from the subgrade directly. The resulting track structure would be completely new except for the rail.

2.4 Track Undercutting

Either a mainline track undercutter or switch undercutter could accomplish undercutting. The undercutter could either discharge into trucks or be equipped with a conveyor and air dump cars over the course of 1-2 days of 8-hour work windows. The existing right of way road would be excavated using conventional methods; this work should be scheduled prior to the track undercutting to allow efficient undercutting and to prevent spoil from the excavation from fouling the clean ballast on the under cut track. The run-in and run-out of the undercut area would need to be surfaced daily to accommodate the trains.

One to two days of prep work will be required to plug and spike the exiting ties to keep them from falling off of the rail behind the undercutter bar. Geotextile could be placed in sections with overlap directly behind the undercutter bar from the right of way roadway. Alternately, plate-boys with modifications to the jacks could be used to lift the track to allow geotextile to be installed under the skeletonized track.

3. PREFERRED ALTERNATIVE

The clearance can be best accomplished using the track undercutting methodology. There are no significant impediments to the undercutting procedure. Shifting the track would eliminate the existing through access along the right of way road, however NS has indicated that they are willing to use the abandoned right of way for access. Two new private crossings will be installed to bring the access road from the south side of the track to the north side and back again.

The geoprobes did not meet refusal to at least 4’ below the top of rail, indicating that the additional 9” of clearance could be obtained with a standard track section.

3.1 Preliminary Design

The preliminary design combines undercutting and track shifting. The existing track is located adjacent to the north wall of the tunnel. The track profile through the tunnel exhibits a sag with the low point near the middle of the tunnel.

3.1.1 Horizontal Geometry

The track shift will require shifting 2,250' of the existing track southward up to 3'–10". The track shift places the centerline of the track approximately under the centerline of the tunnel crown. The clearances achieved by the shift would provide adequate running clearances. The actual limiting clearance is at the 1 o'clock position and is approximately 21'-4". This clearance would limit the amount of future maintenance in the tunnel.

The new curvature in the tunnel is a 7° 56' 33" curve to the left. The track chart indicates that there is a permanent speed restriction on this curve of 30 mph and that the curve has 4" of superelevation. The new curve can achieve the 30 mph speed with 4" of super elevation at an under balance of 1.5".

The spirals are sized to provide a minimum elevation runoff of ½" per 31', or a minimum length of 248'. The shortest spiral is between the existing switch and the tunnel portal. The spiral is 255' long and exceeds the minimum length.

The track shift ties to the existing right hand curve near MP 319 on the east end, and into the existing tangent west of the tunnel.

The existing turnout east of the tunnel is shifted southward approximately half gage (2'-4"). The locations of the new vertical curves will require shifting the existing turnout a minimum of 100' eastward to place it in a vertical tangent.

3.1.2 Vertical Alignment

The proposed undercutting operation was designed to restore a uniform track profile through the tunnel that parallels the crown of the tunnel. The proposed profile also extends the vertical tangent beyond the portals of the tunnels a minimum of 100' (119' at the east portal and 139' at the west portal). The extended vertical tangent serves two purposes: to provide a uniform grade of at least 1 car length outside of the tunnel to allow any car bounce to dampen, and to provide space for running out future track surfacing without affecting the clearance at the tunnel.

The vertical tangents are connect by vertical curves based on the new AREMA procedures. The new procedures do not use different rates of changes for crest and sag curves, resulting in vertical curves of similar lengths. All of the vertical curves exceed the minimum recommended lengths.

The undercutter is assumed to have air dump cars fitted with a conveyor system to remove the spoil from the tunnel. The material outside of the tunnel can be cast to the side, however proper grading is essential to prevent the material from being washed into the new tack structure.

3.1.3 Other Construction

Proper drainage is vital to maintaining the track structure. A new trench drain is proposed in the tunnel. This drain will carry any water in the tunnel out to surface drainage along the tracks.

Lowering the track will place it below the existing ground surface. To allow drainage from beneath the track structure, the ground surface adjacent to the track must be excavated to provide new longitudinal ditches along the track. Likewise, the existing material on the tunnel invert must be lowered to the bottom of the ballast section and sloped to the trench drain.

Two twenty foot wide crossings will carry the access roadway across the track to the abandoned right of way.

3.2 Schedule

The estimated schedule for completing improvements on this tunnel is eight (8) weeks from mobilization to demobilization.

3.2.1 Proposed Construction Phasing

Phase I

The trench drain will be installed in the tunnel under the first phase of construction. Constructing the trench drain first will allow the work to take place on the existing right of way road without fouling the existing track with the equipment. The site grading will also be done in the first phase. Excavating at this time will reduce the potential for fouling the new ballast during the excavation.

All of the Phase I work can be accomplished under daily track windows.

Phase II

The track will be shifted to its new alignment in preparation for undercutting. The track will then be undercut, ballasted, and surfaced. The turnout will be replaced with conventional track panels to allow a continuous undercutting operation. At the completion of the under cutting the turnout will be installed in its final location.

Phase II will require shutting down the track while the track is shifted, undercut, and surfaced. Five 10 hour days are anticipated to accomplish this work. Working multiple shifts and having the undercutter working overnight after the track swings could reduce this duration.

Phase III

After the final site grading to remove the material under and adjacent to the original alignment, the track is re-welded and equalized in this phase. The grade crossings are also installed in this phase after the rail is welded and equalized.

All of the Phase III work can be accomplished under daily track windows.

3.3 Estimate

The total estimated cost for achieving clearance at this location is $989,301 (2005 rates) or $1,070 per foot of tunnel. The work items include mobilization, surveying, track lowering, track shifting, rock cut for drainage trench, tunnel drainage system, and demobilization. The total cost is made up of tunnel, track, signal, and site work items at $664,853 plus a 20% construction contingency, a 10% engineering allowance, and a 14% construction management allowance.

4. USGS TOPOGRAPHIC MAP

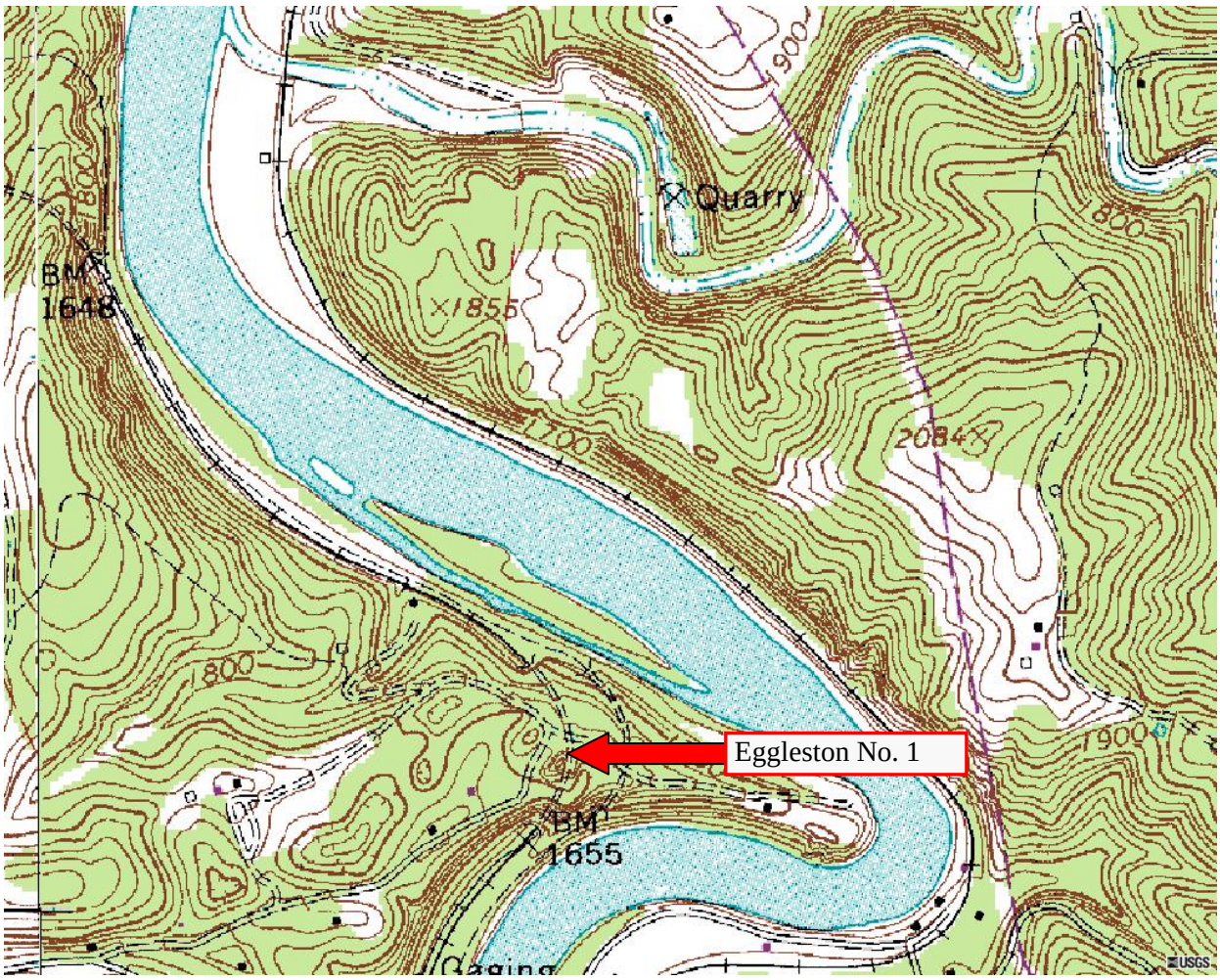

5. AERIAL PHOTO

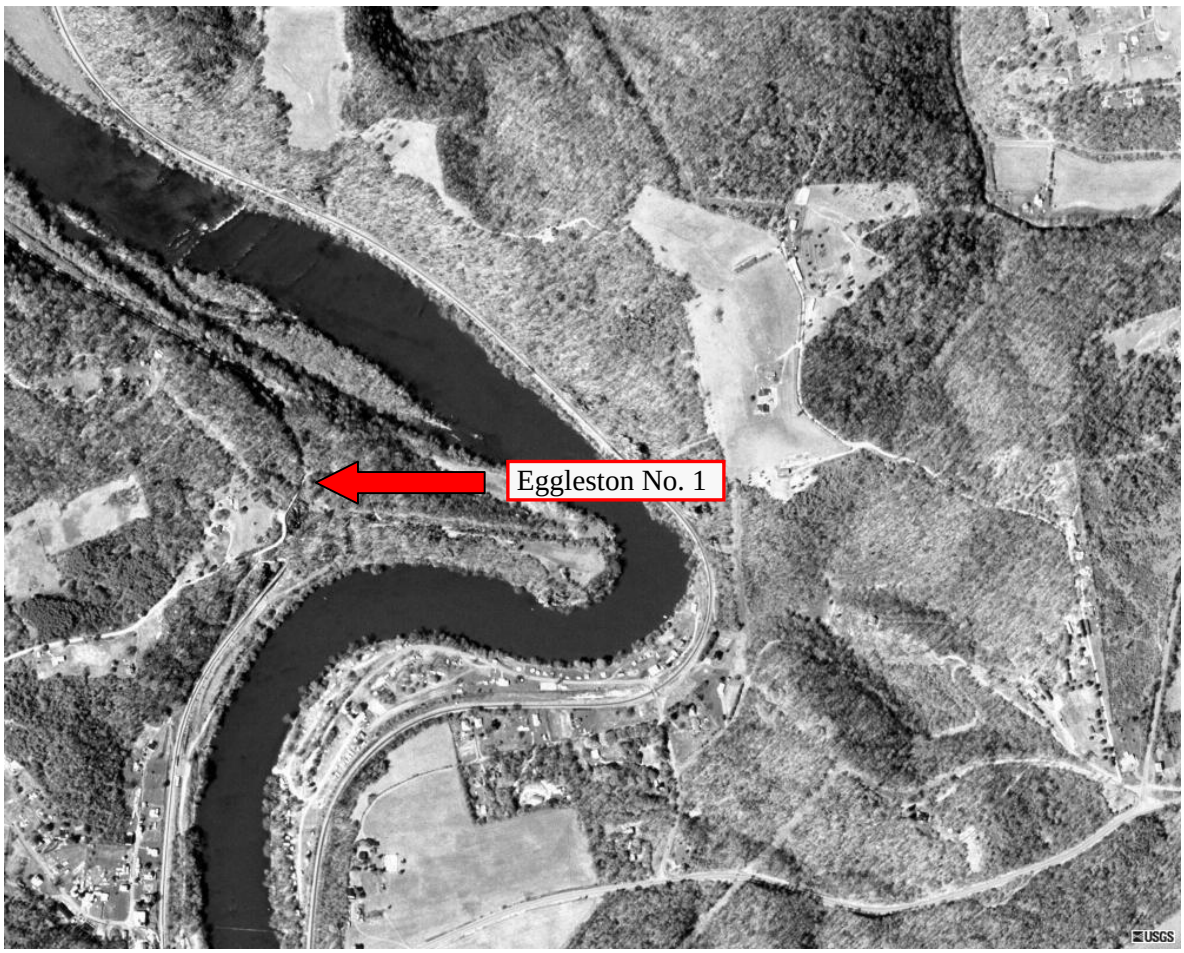

6. TRACK CHART

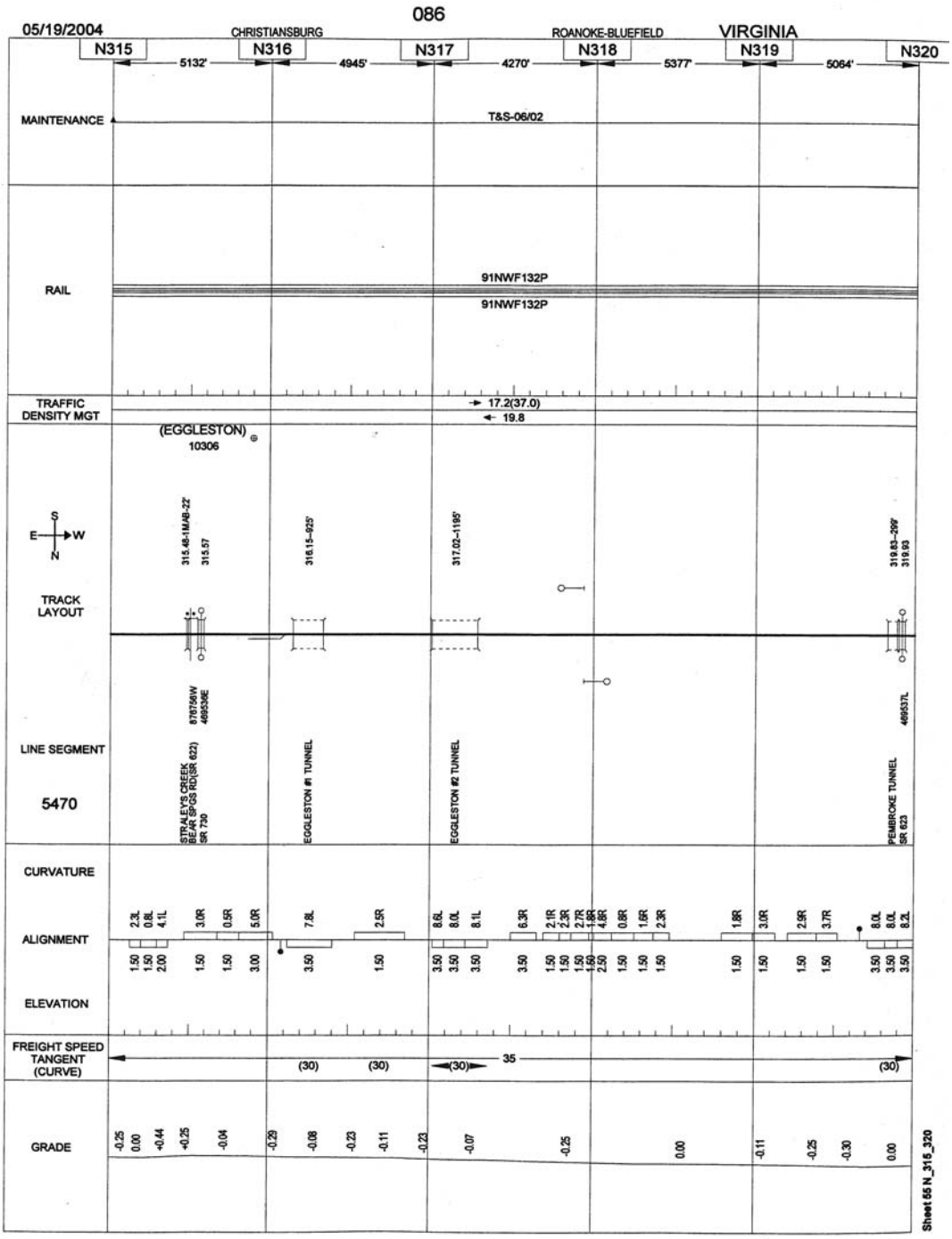

7. PHOTOS

Photo 1. East portal.

Photo 2. Geoprobe at west portal.

Photo 3. Looking east from east portal.

Photo 4. Access road and typical spalls.

8. ESTIMATE

Eggleston No. 1

Tunnel Length	925	ft
Tunnel Width	29.5	ft
# of Tracks	1	

	Contractor		Railroad	
Work Window	10	hrs	10	hrs
Setup & Demobilization Allowance	2	hrs	2	hrs
Production Time	8	hrs	8	hrs

Tunnel Work Items	UOM	Quantity	Unit Rate	Total
Mobilization	%	5%		$9,902.70
Rock Cut Drainage Trench	LF	1025	$172.39	$176,702.40
Tunnel Drainage	LF	1025	$17.63	$18,068.38
Demobilization	DY	1	$3,283.20	$3,283.20
Total Tunnel Work Items	**LF**	**925**	**$224.82**	**$207,956.68**

Trackwork Items	UOM	Quantity	Unit Rate	Total
Mobilization	DY	1	$3,110.32	$3,110.32
Surveying	DY	2	$1,300.00	$2,600.00
Track Preparation/Restoration	DY	2	$3,431.32	$6,862.64
Undercutting	PF	3300	$15.78	$52,059.44
Track Shift < 8' & > 1'	TF	2250	$7.99	$17,987.12
Saw Cuts	EA	8	$5,719.72	$45,757.76
Panel Track	TF	220	$41.10	$9,042.56
Field Welds	EA	8	$2,523.78	$20,190.25
Surfacing & Lining	PF	7500	$2.06	$15,456.10
Ballasting Track	TN	2500	$37.29	$93,231.32
Equalizing rail	DY	1	$6,701.14	$6,701.14
Elastomeric Flangeway Crossing	EA	2	$18,089.47	$36,178.94
Demobilization	DY			
Total Trackwork Items				**$309,177.60**

Signal Items	UOM	Quantity	Unit Rate	Total
Mobilization	DY			
Relocate Cables / Track Leads	LF	150	$23.82	$3,572.59
Demobilization	DY			
Total Signal Items				**$3,572.59**

Site Items	UOM	Quantity	Unit Rate	Total
Mobilization	DY	1	$2,483.60	$2,483.60
Erosion & Sedimentation Control	EA	1	$11,958.80	$11,958.80
Site Grading	CY	4800	$20.52	$98,486.68
Rock Excavation	CY			
Sub-Ballast	CY			
Drainage	LF			
Demobilization	DY			
Total Site Items				**$112,929.08**

Special Items	UOM	Quantity	Unit Rate	Total
Mobilization	DY			
Flagging	DY	38	$821.50	$31,217.00
Flood Track with Ballast for Protection	TN			
Remove Flooded Ballast	TN			
Temporary Bridges	EA			
New Railroad Bridges	EA			
New Highway Bridges	EA			
Invert/Crown Void Grouting	DY			
Demobilization	DY			
Total Specialty Items				**$31,217.00**

Subtotal All Items		**$664,852.95**
Construction Contingency	**20%**	**$132,970.59**
Engineering Allowance	**10%**	**$79,782.35**
Construction Management Allowance	**14%**	**$111,695.30**
Total		**$989,301.19**

9. DRAWINGS

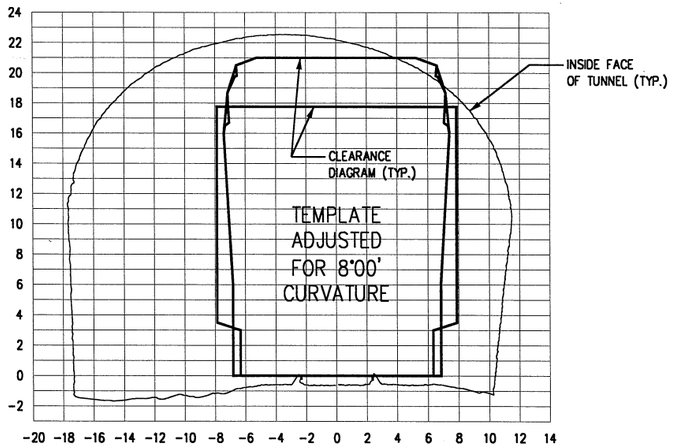

0+00
EAST PORTAL

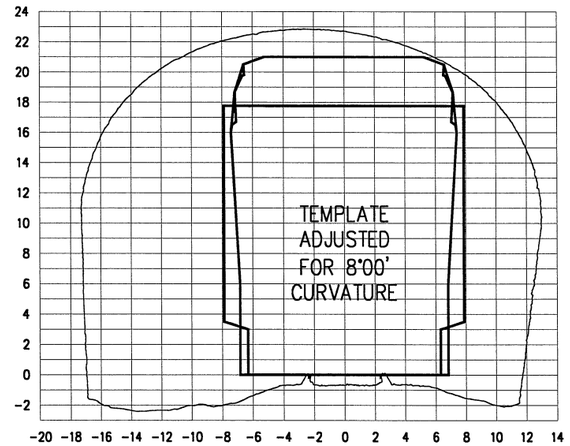

1+02

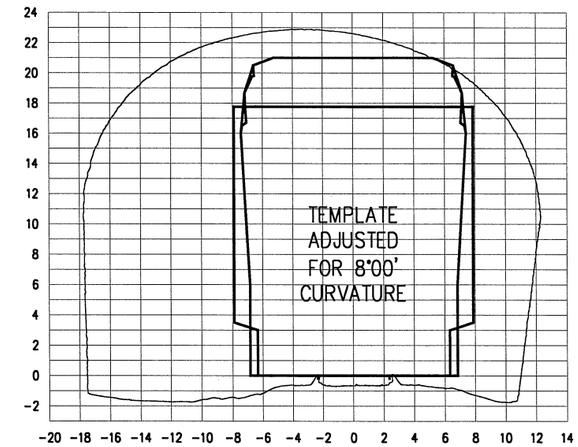

2+00

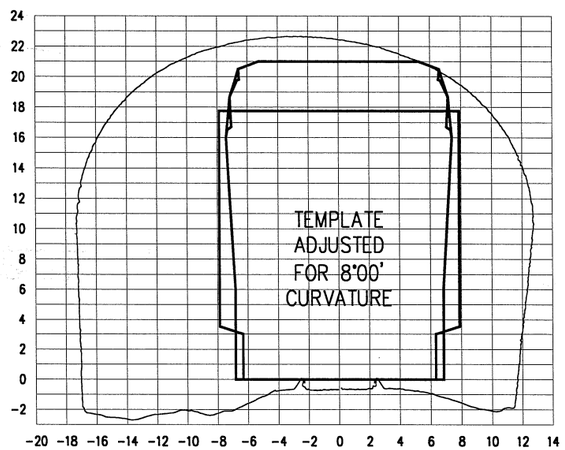

0+51

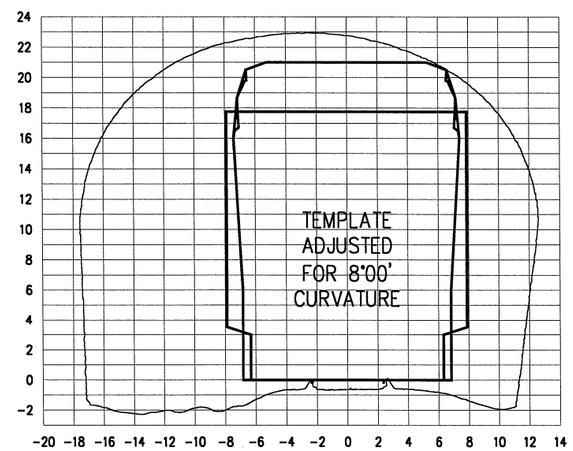

1+51

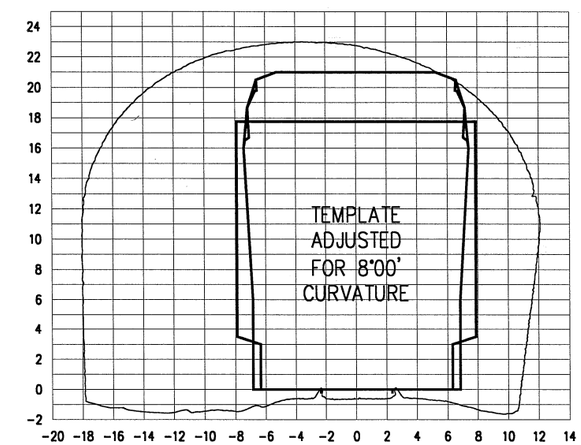

2+54

NOTES:

1. HORIZONTAL DATUM IS PARALLEL TO TRACK. WHERE TRACK IS SUPERELEVATED, DATUM IS NOT PARALLEL WITH GROUND.
2. CROSS SECTION GIVEN FOR STA. 0+00 IS A COMPOSITE FOR THE TUNNEL FROM STA. 0+00 THROUGH 0+50. ALL OF THE SECTIONS FOLLOW THIS CONVENTION.

NOT FOR CONSTRUCTION

SCALE: 1" = 100'

50 0 100 200 300

Hatch Mott MacDonald

NORFOLK SOUTHERN

OWNING COMPANY
VIRGINIA
OPERATING DIVISION
OFFICE OF THE CHIEF ENGINEER - DESIGN AND CONSTRUCTION - ATLANTA, GA.

REV	BY	DATE	DESCRIPTION
P1	DJL	7/19/05	PRELIMINARY ENGINEERING PHASE REPORT

LOCATION: EGGLESTON NO. 1, EGGLESTON, VA

TITLE: EXISTING TUNNEL CLEARANCE CROSS SECTIONS – 1 OF 3

DGN	PID No.	VBN 15433	MILE POST N-316.15
DWN	FILE No.	DRAWING NUMBER	
CHK	DATE APRIL 1, 2005		

FILE NAME = P:\NSR\20399\CAD\LASER CAR INFO\3615 eggleston_nol.dgn
DATE/TIME = 08/01/2005 03:33:22 PM

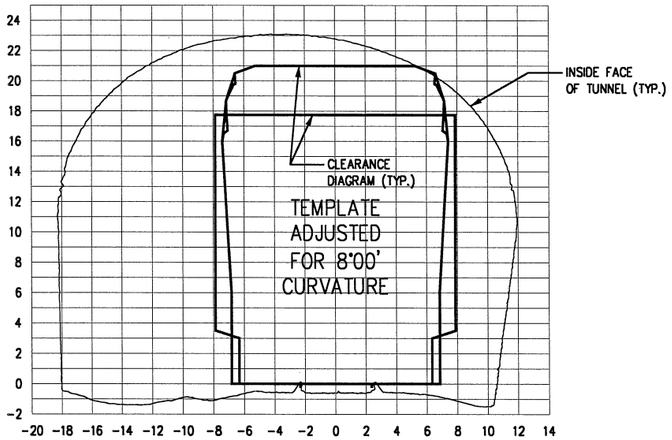

3+00

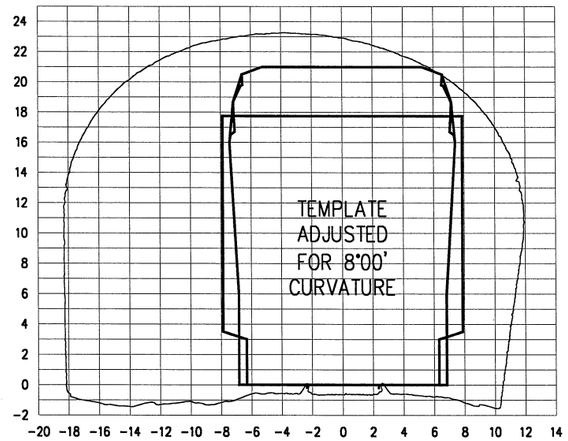

4+02

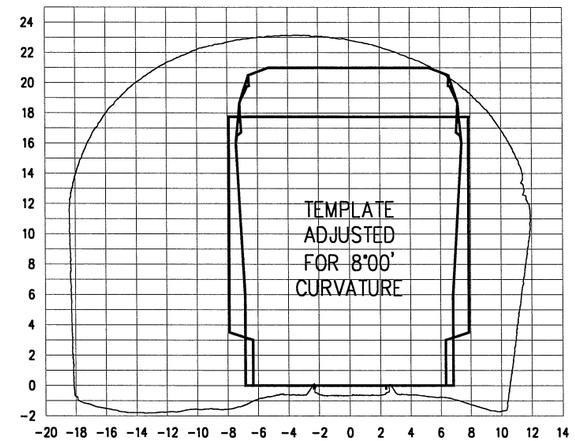

5+00

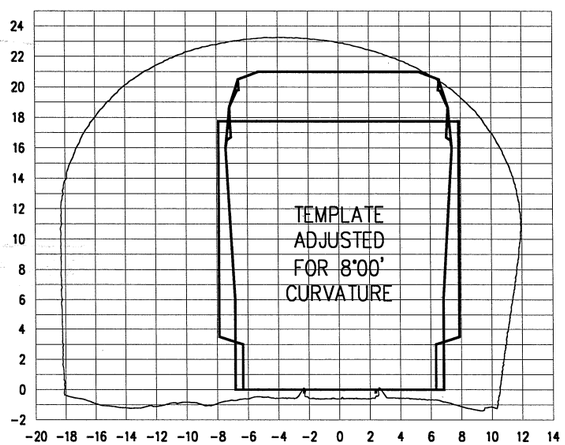

3+53

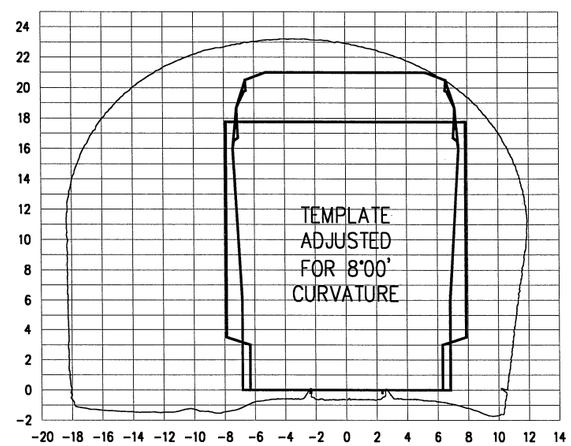

4+51

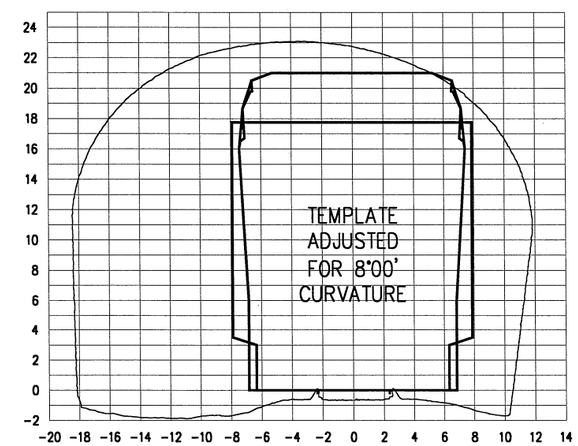

5+51

NOTES:

1. HORIZONTAL DATUM IS PARALLEL TO TRACK. WHERE TRACK IS SUPERELEVATED, DATUM IS NOT PARALLEL WITH GROUND.

2. CROSS SECTION GIVEN FOR STA. 0+00 IS A COMPOSITE FOR THE TUNNEL FROM STA. 0+00 THROUGH 0+50. ALL OF THE SECTIONS FOLLOW THIS CONVENTION.

NOT FOR CONSTRUCTION

SCALE: 1" = 100'

50 0 100 200 300

Hatch Mott MacDonald

NORFOLK SOUTHERN

OWNING COMPANY
VIRGINIA
OPERATING DIVISION
OFFICE OF THE CHIEF ENGINEER - DESIGN AND CONSTRUCTION - ATLANTA, GA.

REV	BY	DATE	DESCRIPTION
P1	DJL	7/19/05	PRELIMINARY ENGINEERING PHASE REPORT

LOCATION: EGGLESTON NO. 1, EGGLESTON, VA

TITLE: EXISTING TUNNEL CLEARANCE CROSS SECTIONS – 2 OF 3

DGN | PID No. | VRN 15433 | MILE POST N-316.15

DWN | FILE No. | DRAWING NUMBER

CHK | DATE APRIL 1, 2005

FILE NAME = P:\NSR\269393\CAD\LASER CAR INFO\36J5 eggleston_noi.dgn
DATE/TIME = 08/09/2005 03:33:39 PM

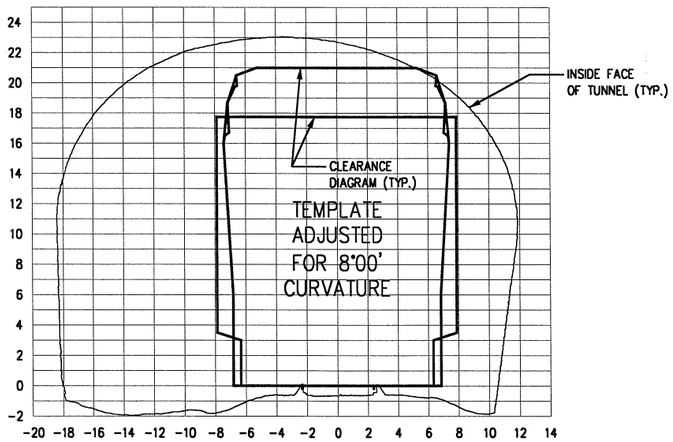

6+03

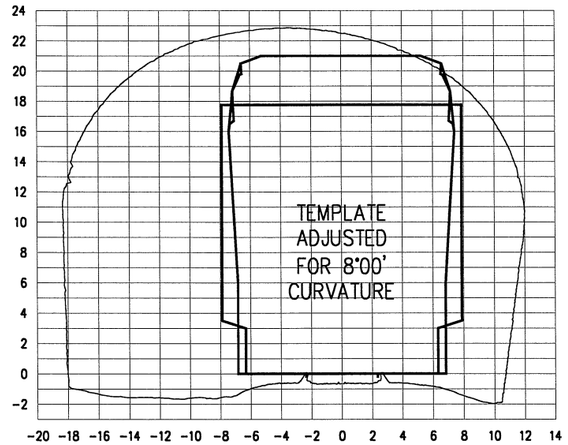

7+04

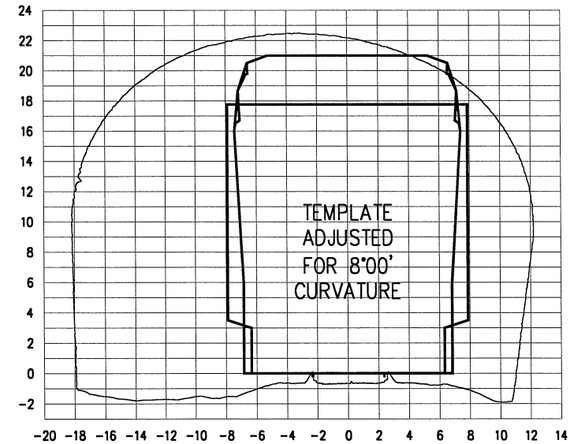

8+03

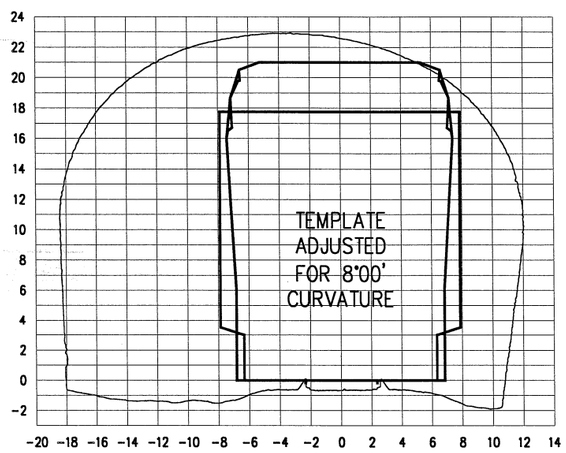

6+54

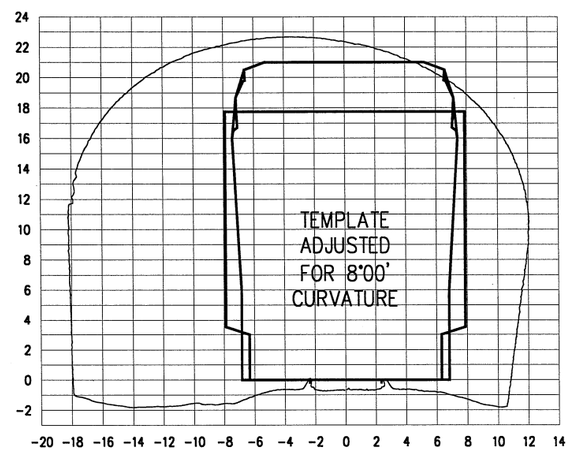

7+51

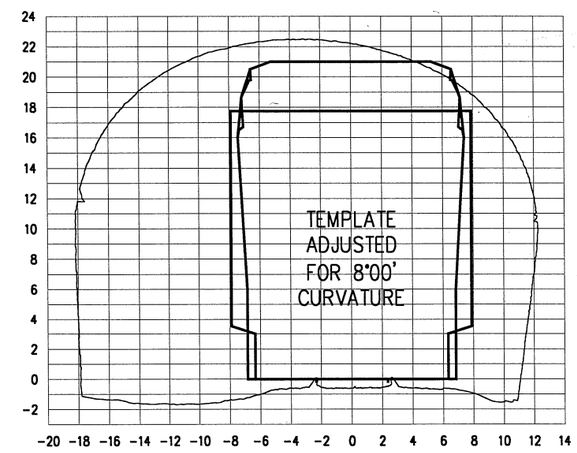

8+52
WEST PORTAL

NOTES:

1. HORIZONTAL DATUM IS PARALLEL TO TRACK. WHERE TRACK IS SUPERELEVATED, DATUM IS NOT PARALLEL WITH GROUND.
2. CROSS SECTION GIVEN FOR STA. 0+00 IS A COMPOSITE FOR THE TUNNEL FROM STA. 0+00 THROUGH 0+50. ALL OF THE SECTIONS FOLLOW THIS CONVENTION.

NOT FOR CONSTRUCTION

SCALE: 1" = 100'

50 0 100 200 300

Hatch Mott MacDonald

NORFOLK SOUTHERN

OWNING COMPANY
VIRGINIA
OPERATING DIVISION
OFFICE OF THE CHIEF ENGINEER - DESIGN AND CONSTRUCTION - ATLANTA, GA.

REV	BY	DATE	DESCRIPTION
P1	DJL	7/19/05	PRELIMINARY ENGINEERING PHASE REPORT

LOCATION: EGGLESTON NO. 1, EGGLESTON, VA

TITLE: EXISTING TUNNEL CLEARANCE CROSS SECTIONS – 3 OF 3

DGN	PID No.	VRN	MILE POST
		15433	N-316.15
DWN	FILE No.	DRAWING NUMBER	
CHK	DATE APRIL 1, 2005		

FILE NAME = P:\NSR\26939\CAD\LASER CAR INFO\36J5 eggleston_noi.dgn
DATE/TIME = 08/01/2005 03:33:51 PM

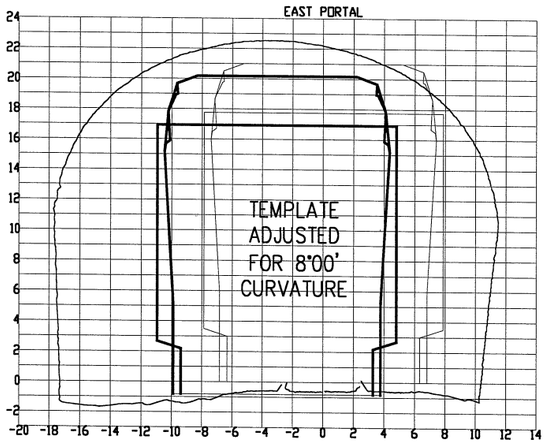

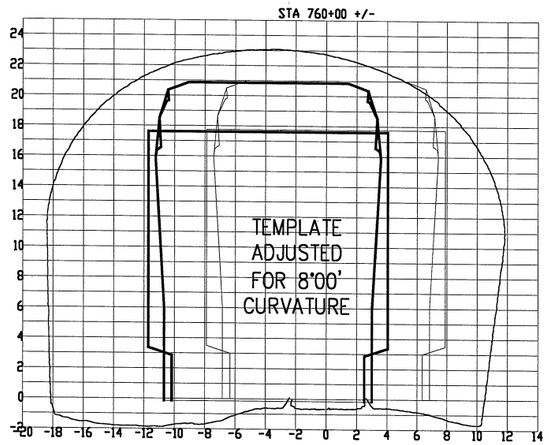

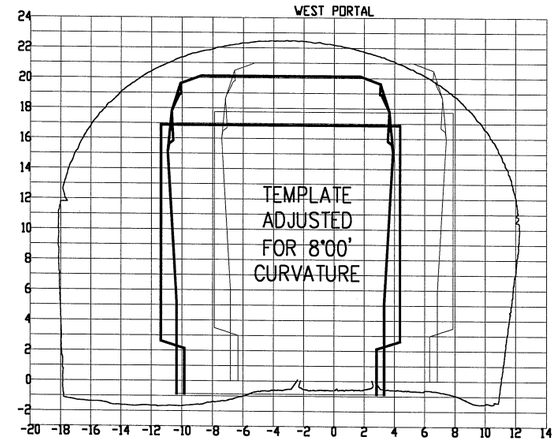

NOT FOR CONSTRUCTION

SCALE: 1" = 100'

50 0 100 200 300

REV	BY	DATE	DESCRIPTION
P1	OJL	8/17/05	PRELIMINARY ENGINEERING PHASE REPORT

Hatch Mott MacDonald

NORFOLK SOUTHERN

OWNING COMPANY
VIRGINIA
OPERATING DIVISION
OFFICE OF THE CHIEF ENGINEER - DESIGN AND CONSTRUCTION - ATLANTA, GA.

LOCATION: EGGLESTON NO. 1, EGGLESTON, VA

TITLE: PROPOSED TUNNEL CLEARANCE CROSS SECTIONS

DGN | PID No. | VRN 15433 | MILE POST 316.15

DWN | FILE No. | DRAWING NUMBER

CHK | DATE JULY 18, 2005

FILE NAME = P:\NSR\20939\CAD\survey info\316.15 Eggleston No.1\316.15-prop sections.dgn
DATE/TIME = 08/01/2005 03:35:58 PM

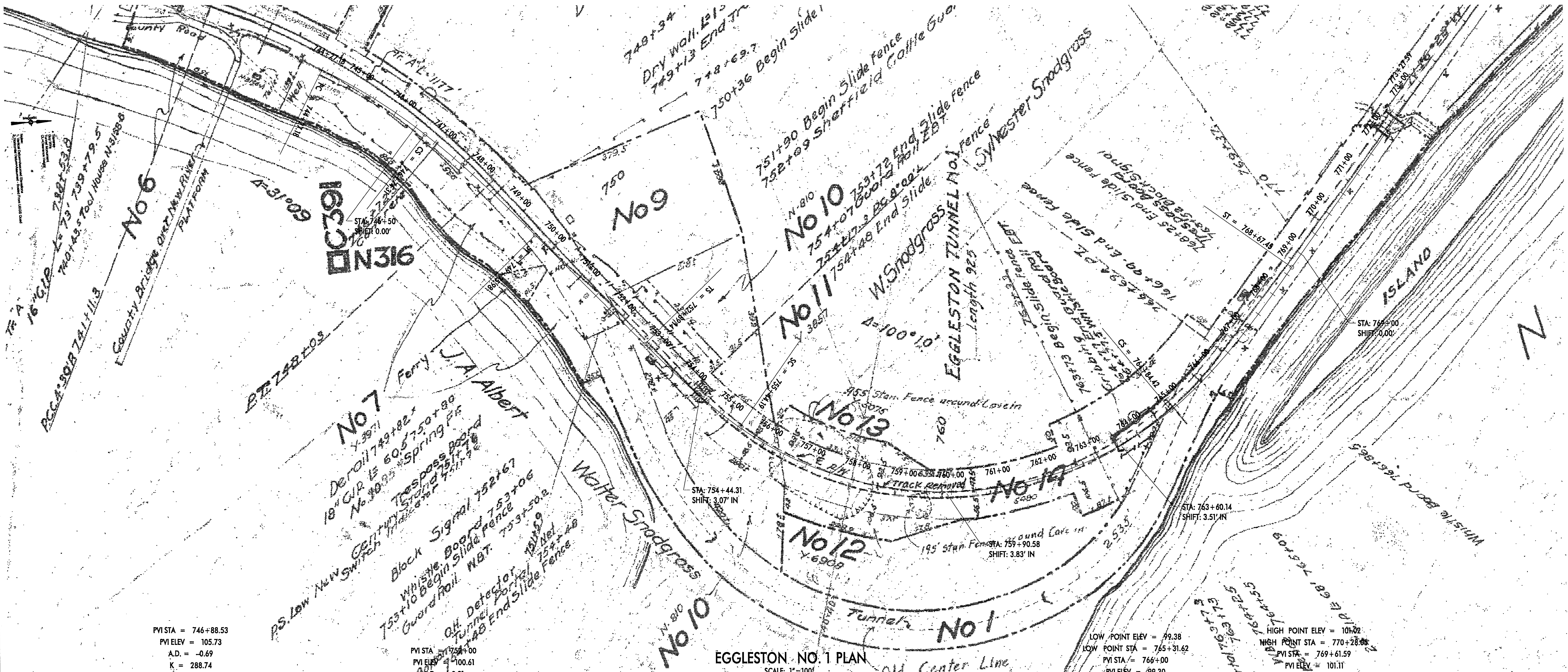

EGGLESTON NO. 1 PLAN

SCALE: 1"=100'

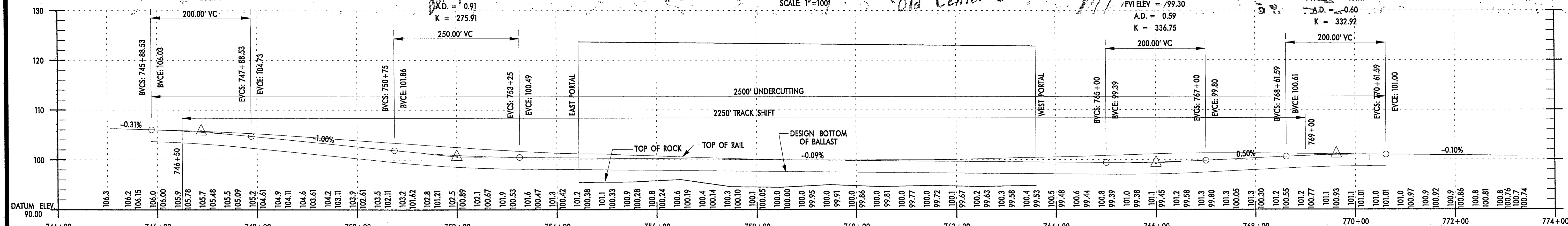

EGGLESTON NO. 1 PROFILE

SCALE: 1"=100' HORIZ.
1"=10' VERT.

NOT FOR CONSTRUCTION

SCALE: 1"=100'

Hatch Mott MacDonald

NORFOLK SOUTHERN

OWNING COMPANY
VIRGINIA
OPERATING DIVISION
OFFICE OF THE CHIEF ENGINEER - DESIGN AND CONSTRUCTION - ATLANTA, GA.

REV	BY	DATE	DESCRIPTION
P2	DJL	10/14/05	PRELIMINARY ENGINEERING PHASE REPORT
P1	MJL	7/18/05	PRELIMINARY ENGINEERING PHASE REPORT

LOCATION: EGGLESTON NO. 1, EGGLESTON, VA

TITLE: PLAN AND PROFILE

DGN | PID No. | VRN 15433 | MILE POST 316.15
DWN | FILE No. | DRAWING NUMBER
CHK | DATE APRIL 1, 2005

FILE NAME = P:\NSR\219399\CAD\survey info\316.15 Eggleston No. 1\316.15-Design_plan and profile.dgn
DATE/TIME = 10/12/2005 02:08:22 PM

Station	Elevation	Grade Out (%)	Curve Length
745+06.32	106.29	−0.31	
746+88.53	105.73	−1.00	200.00

Vertical Curve Information: (crest curve)
PVC Station: 745+88.53 Elevation: 106.03
PVI Station: 746+88.53 Elevation: 105.73
PVT Station: 747+88.53 Elevation: 104.73
Grade in (%): −0.31 Grade out (%): −1.00
Change (%): 0.69 Curve Length: 200.00

752+00.00 100.61 −0.09 250.00
Vertical Curve Information: (sag curve)
PVC Station: 750+75 Elevation: 101.86
PVI Station: 752+00 Elevation: 100.61
PVT Station: 753+25 Elevation: 100.49
Grade in (%): −1.00 Grade out (%): −0.09
Change (%): 0.91 Curve Length: 250.00

4766+00 99.30 0.50 200.00
Vertical Curve Information: (sag curve)
PVC Station: 765+00 Elevation: 99.39
PVI Station: 766+00 Elevation: 99.30
PVT Station: 767+00 Elevation: 99.80
Grade in (%): −0.09 Grade out (%): 0.50
Change (%): 0.59 Curve Length: 200.00

5769+61.59 101.11 −0.10 200.00
Vertical Curve Information: (crest curve)
PVC Station: 768+61.59 Elevation: 100.61
PVI Station: 769+61.59 Elevation: 101.11
PVT Station: 770+61.59 Elevation: 101.00
Grade in (%): 0.50 Grade out (%): −0.10
Change (%): 0.60 Curve Length: 200.00

Project: 316-15
Horizontal Alignment Station and Curve Report.
Alignment: EGG1
Desc: Eggleston #1 Proposed Alignment

Desc.	Station	Spiral/Curve Data		Northing	Easting
PI	744+27.18			3634407.8472	10866267.4535
	Length:	210.46	Course:	N 30-31-32.5 E	
PI	746+37.64			3634589.1415	10866374.3535
	Length:	1651.57	Course:	N 49-14-12.9 E	
	Delta:	18-42-40.4			

Circular Curve Data

PC	744+27.18			3634407.8472	10866267.4535
CC				3633788.8851	10867317.1660
SC	746+74.31			3634606.5833	10866413.6285
	Delta:	11-37-09.4	Type:	RIGHT	
	Radius:	1218.61	DOC:	04-42-06.2	
	Length:	247.13	Tangent:	123.99	
	Mid-Ord:	6.26	External:	6.29	
	Chord:	246.70	Course:	N 36-20-07.2 E	
	Es:	18.04			

Spiral Curve Data: CLOTHOID

SC	746+74.31			3634606.5833	10866413.6285
SPI				3634681.2507	10866481.2022
PC	749+75.98			3634812.6712	10866633.6528
	Length:	301.67	L Tan:	201.28	
	Radius:	1218.61	S Tan:	100.70	
	Theta:	7-05-31.0	P:	3.11	
	X:	301.21	K:	150.76	
	Y:	12.43	A:	606.32	
	Chord:	301.47	Course:	N 46-52-23.7 E	
	Ts:	342.35			
PI	762+85.20			3635667.5040	10867625.2770
	Length:	1515.94	Course:	N 50-41-58.6 W	
	Delta:	99-56-11.5			

Tangent Data

	749+75.98			3634812.6712	10866633.6528
	752+89.14			3635017.1412	10866870.8423
	Length:	313.16	Course:	N 49-14-12.9 E	

Spiral Curve Data: CLOTHOID

TS	752+89.14			3635017.1412	10866870.8423
SPI				3635128.3427	10866999.8384
SC	755+44.19			3635194.5002	10867053.6349
	Length:	255.05	L Tan:	170.31	
	Radius:	721.97	S Tan:	85.27	
	Theta:	10-07-13.4	P:	3.75	
	X:	254.25	K:	127.39	
	Y:	14.98	A:	429.11	
	Chord:	254.69	Course:	N 45-51-51.7 E	
	Ts:	996.06			

Circular Curve Data

SC	755+44.19			3635194.5002	10867053.6349
CC				3635649.9898	10866493.4856
SC	764+84.42			3636069.2454	10867081.2464
	Delta:	74-37-01.8	Type:	LEFT	
	Radius:	721.97	DOC:	07-56-09.8	
	Length:	940.23	Tangent:	550.16	
	Mid-Ord:	147.73	External:	185.73	
	Chord:	875.18	Course:	N 01-48-28.6 E	
	Es:	409.96			

Spiral Curve Data: CLOTHOID

SC	764+84.42			3636069.2454	10867081.2464
SPI				3636173.8913	10867006.6013
PC	768+67.45			3636336.2312	10866808.2636
	Length:	383.04	L Tan:	256.30	
	Radius:	721.97	S Tan:	128.54	
	Theta:	15-11-56.2	P:	8.45	
	X:	380.35	K:	191.07	
	Y:	33.70	A:	525.87	
	Chord:	381.84	Course:	N 45-38-10.7 W	
	Ts:	1055.80			
PI	773+27.59			3636627.6765	10866452.1921

Tangent Data

	768+67.45			3636336.2312	10866808.2636
	773+27.59			3636627.6765	10866452.1921
	Length:	460.14	Course:	N 50-41-58.6 W	

NOT FOR CONSTRUCTION

SCALE: 1" = 100'

50 0 100 200 300

REV	BY	DATE	DESCRIPTION
P1	MJL	7/18/05	PRELIMINARY ENGINEERING PHASE REPORT

Hatch Mott MacDonald

NORFOLK SOUTHERN

OWNING COMPANY
VIRGINIA
OPERATING DIVISION
OFFICE OF THE CHIEF ENGINEER - DESIGN AND CONSTRUCTION - ATLANTA, GA.

LOCATION: EGGLESTON NO. 1, EGGLESTON, VA

TITLE: CURVE DATA

DGN | PID No. 15433 | VRN | MILE POST 316.15
DWN | FILE No. | DRAWING NUMBER
CHK | DATE APRIL 1, 2005

FILE NAME = P:\NSR\29399\CAD\survey Info\316.15 Eggleston No.1\316.15-curve data.dgn
DATE/TIME = 10/12/2005 01:04:01 PM

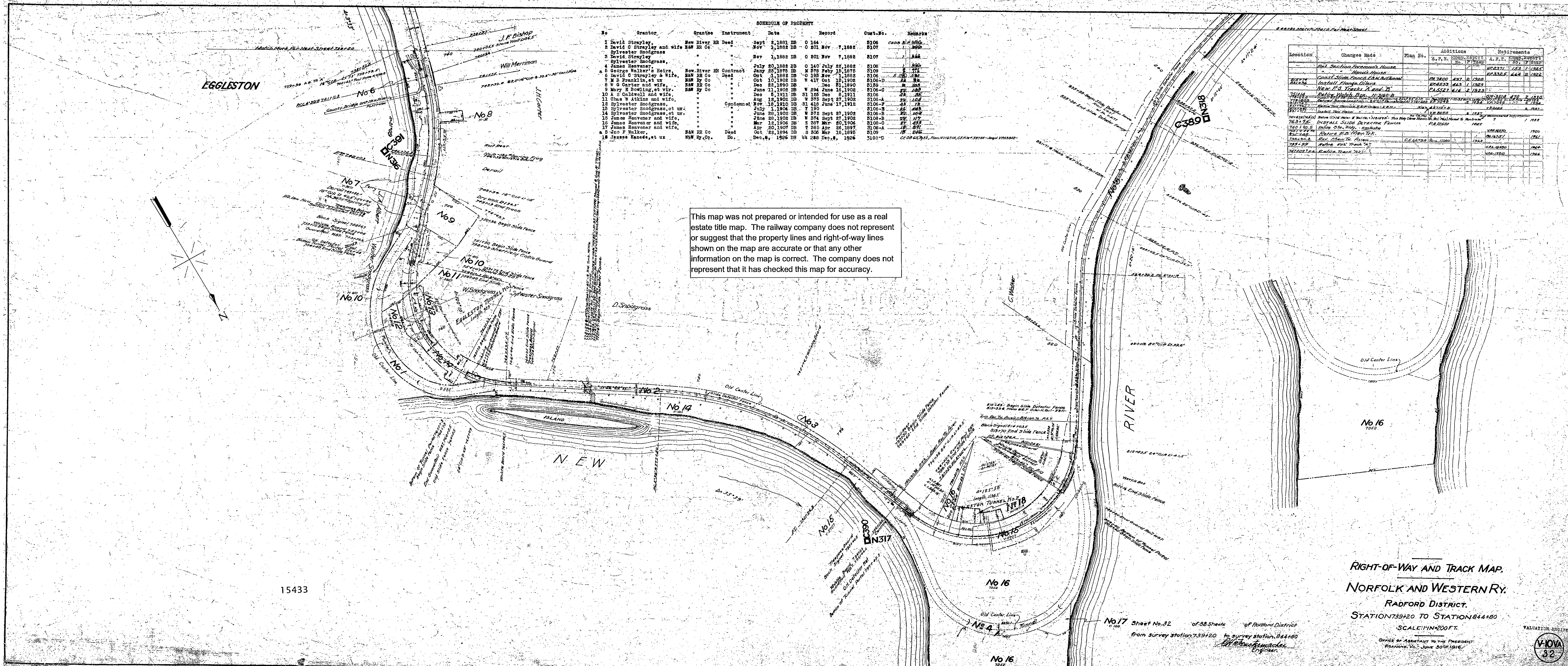

SCHEDULE OF PROPERTY

No	Grantor	Grantee	Instrument	Date		Record	Cust. No.	Remarks
1	David Strayley,	New River RR	Deed	Sept 2,1881	DB	O 164	3106	CEDB [illegible]
2	David C Strayley and wife	N&W RR Co	"	Nov 1,1882	DB	O 201 Nov 7,1882	3107	[illegible]
	Sylvester Snodgrass							
3	David Strayley	"	"	Nov 1,1882	DB	O 201 Nov 7,1882	3107	[illegible]
	Sylvester Snodgrass,							
4	James Heavener,	"	"	July 20,1882	DB	O 140 July 22,1882	3108	[illegible]
a 5	George Walker's Heirs,	New River RR	Contract	Jany 23,1875	DB	M 378 Feby 15,1875	3109	[illegible]
6	David C Strayley & Wife,	N&W RR Co	Deed	Oct 1,1882	DB	O 193 Nov 1,1882	3106	[illegible]
7	M B Franklin, et ux	N&W Ry Co	"	Oct 10,1902	DB	W 417 Oct 13,1902	3106-D	[illegible]
8	W G Carter and wife,	N&W RR Co	"	Dec 22,1890	DB	Dec 31,1890	3138	[illegible]
9	Mary E Bowling, et vir.	N&W Ry Co	"	June 11,1902	DB	W 294 June 16,1902	3106-C	[illegible]
10	A S Caldwell and wife,	"	"	Dec 5,1911	DB	31 125 Dec 8,1911	3106	[illegible]
11	Chas W Atkins and wife,	"	"	Aug 12,1902	DB	W 375 Sept 27,1902	3106-A	[illegible]
12	Sylvester Snodgrass,	"	Condemned	Nov 18,1910	DB	31 418 June 17,1912	3106-F	[illegible]
13	Sylvester Snodgrass, et ux.	"	"	July 1,1904	DB	Y 190	3106-E	[illegible]
14	Sylvester Snodgrass, et ux.	"	"	June 28,1902	DB	W 372 Sept 27,1902	3106-B	[illegible]
15	James Heavener and wife,	"	"	June 28,1902	DB	W 374 Sept 27,1902	3108-B	[illegible]
16	James Heavener and wife,	"	"	Mar 12,1906	DB	Z 387 Mar 20,1906	3108-C	[illegible]
17	James Heavener and wife,	"	"	Apr 20,1907	DB	T 385 Apr 26,1897	3108-A	[illegible]
a 5	Jno F Walker,	N&W RR Co	Deed	Oct 22,1894	DB	S 305 Mar 18,1895	3109	[illegible]
18	Jessee Kanode, et ux	N&W Ry. Co.	Do.	Dec. 8, 1926	DB	44 288 Dec. 8, 1926	3108-D	CE-DB 65, Pg. 22, Plan N11671A, CE File #59744 - Acqd. VPA 3342 -

Location	Changes Made	Plan No.	Additions A.F.E.	Additions Comp. Report No.	Additions Comp. Report P	Additions Comp. Report Year	Retirements A.F.E.	Retirements Comp. Report No.	Retirements Comp. Report P	Retirements Comp. Report Year
	Ret. Section Foreman's House						VP.2371	153	1	1925
	" " Hand's House						VP.3325	664	2	1926
815+74	Const. Slide Fence E&W. Port Tunnel		PA.7400	497	2	1928				
831+36	Install Flange Oilers		VP.4533	463	1	1929				
	New P.S. Tracks "A" and "B"		P.A.5527	616	2	1923				
751+14	Retire Watch Box. N-3160-B						GM-3514	470	2	1930
772+22.6 / 772+60.3	Install 40' of 42" Conc. Pipe Culvt. Replacing 36' of 24" C.I.P. — See MW85 1-10-35 With Letter OVP 1-11-35 In C.E. File #25722. Retired Same Location — 24" C.I.P. Reinstalled At 772+60.3		V.P.7092		2	1934	V.P.7092	[illegible]	2	1934
815+74 / 831+96	Retire Two Derrick R&F Oilers - E.B.M -		[illegible] 43716-5				V.P.8469		2	1937
875+33 / 831+71	Install Two Meco		V.P.8450		2	1937				
741+07.5 (16F Lt)	Retire 11'x14' Meter & Tool Ho. #N8159B - This Bldg (Later Shown On Val. Map) Moved To Pembroke And Renumbered N-[illegible]	See C.E. Map					?		1	1938
763+75	INSTALL SLIDE DETECTOR FENCES		P.A.12520			1947				
740+90.5	Retire Sta. Bldg. - Eggleston						VPA 16070			1960
701+88 to 815+29	Retire E.B. Main Trk.						PA 16751			1961
795+90.2	Rev. Main Tk. Align	C.E.66795	Est. 11000			1962				
793+99	Retire 502' Track "A"						V.P.A.18490			1964
747+09.3 P.S.	Retire Track "A2"						VPA-19910			1966

This map was not prepared or intended for use as a real estate title map. The railway company does not represent or suggest that the property lines and right-of-way lines shown on the map are accurate or that any other information on the map is correct. The company does not represent that it has checked this map for accuracy.

RIGHT-OF-WAY AND TRACK MAP.

NORFOLK AND WESTERN RY.

RADFORD DISTRICT.

STATION 739+20 TO STATION 844+80

SCALE: 1" IN = 200 FT.

OFFICE OF ASSISTANT TO THE PRESIDENT
ROANOKE, VA. JUNE 30TH 1916.

Sheet No. 32 of 88 Sheets of Radford District
from survey station 739+20 to survey station 844+80

C.H. [illegible]
Engineer.

VALUATION ENGINEER

V-10VA
32

15433