Heartland Corridor, Walton Virginia to Columbus Ohio

Preliminary Engineering Phase Report

Glen Alum Tunnel – MP N439.47 Glen Alum, WV

October 14, 2005, Rev. 2

Hatch Mott MacDonald

Hatch Mott MacDonald

Condition Assessment Report

October 14, 2005

Norfolk Southern Railway
Heartland Corridor, Walton VA to Columbus OH

Glen Alum Tunnel – MP N439.47

Statistics: Pocahontas Division
Double-width Tunnel for Main #1 and Main #2
Length = 1,302'
Concrete lined
Degree of Curvature = 5.9 RT (per Track Chart)
Superelevation = 3.5" (per Track Chart)

1. EXISTING CONDITIONS 2

2. CLEARANCE IMPROVEMENT ALTERNATIVES 5

3. PREFERRED ALTERNATIVE 6

4. USGS TOPOGRAPHIC MAP 8

5. AERIAL PHOTO 9

6. TRACK CHART 10

7. PHOTOS 11

8. ESTIMATE 14

9. DRAWINGS 16

Tunnel Clearance Cross Sections

Plan and Profile

Valuation Map

1. EXISTING CONDITIONS

1.1 Background

Valuation maps V-13 WV/62, 63 (16317, 16318) for the Glen Alum Tunnel are dated June 30, 1916. Parcels for the tunnel were acquired in 1909. Construction of the tunnel was probably completed in 1913 based on the date stamped on the east and west portals. A parcel to the south of the tunnel was acquired in 1891; therefore the railroad in this area was probably built shortly afterwards. The track around the tunnel, on this parcel, was retired in 1966. Additional information on this tunnel was obtained from various sources such as topographic maps, aerial photos, inspection reports, track charts, and field investigations that were performed on March 29, June 15, August 4, and August 5, 2005.

1.2 General Area

The tunnel is located in a sparsely populated area in Glen Alum, WV with access along the right of way to both the east and west portals. The area is generally hilly and wooded. Access from the east for large equipment or trailers is hindered due to the narrow area between the ties and the edge of the bridge over Ben Creek at MP N-438.87. The available width is less than 9'.

A large area adjacent to the west portal would serve as a good staging area. A smaller area at the east portal could also be used to store equipment or materials. There is an asphalt ramp on Main #1, 176' from the east portal, that is used for access to the track for high-rail equipment.

A siding, on Main #2, is located east of the tunnel with the point of switch 235' from the portal. A slide fence is located on the north side of the tracks outside of the east portal. A small concrete bridge, over Alum Creek and a local one-lane unpaved road, is located 210' from the west portal. Partial stone abutments from the original alignment are located south of this bridge. During the tunnel inspection it was observed that local residents and all terrain vehicles frequently use this road.

1.3 Structural Conditions

The tunnel is 1,302' long with a concrete liner and a nominal width of 30.5'. It is a double width tunnel for two tracks. The liner is in very good condition. Some efflorescence is visible at the construction joints in the crown. Water leaking from the joints is confined to the first 100' in from both portals.

A 24" deep concrete drainage channel, constructed in 1944, is located on the north side of the tunnel. The footer forms one side of the channel and is exposed approximately 14" deep throughout the tunnel. Water in this channel flows steadily and outlets into Alum Creek north of the aforementioned bridge. Weeps in the tunnel wall outlet into this channel. Standing water was noted in the ballast, however there does not appear to be a problem with pumping and mud on the ballast. It is not evident if the ballast is being drained by the drainage channel.

A small portion of the tunnel invert material was excavated to fully expose the base of the tunnel liner footing. The footing thickness was found to be 24". The vertical distance from the top of rail to the base of the footing was measured at 37".

Liner cores were taken on August 4 and 5, 2005. Cores were drilled into the liner at locations 250', and 1052' into the tunnel from the east portal. The cores were taken at the 7, 10 and 12 o'clock positions at each location. A borescope was inserted into the holes to view inside the liner. The video from the borescope was recorded onto a DVD. The liner probe investigation is summarized in the table below:

Summary of Glen Alum Tunnel Liner Core Investigation			
Distance from East Portal (feet)	**Position**	**Liner Thickness**	**Notes**
250	7 o'clock	42"	
250	10 o'clock	42"	
250	12 o'clock	28"	Wood Above Liner
1052	7 o'clock	39"	
1052	10 o'clock	43"	
1052	12 o'clock	28"	Concrete in poor shape at rock/concrete interface

Two samples of concrete from the liner core investigation were tested. A sample from 250' in from the east portal, 10:00 o'clock position, taken from 0" – 18" into the core had a compressive strength of 4305 psi. A sample from 1052' in from the east portal, 10:00 o'clock position, taken from 16" – 26" into the core had a compressive strength of 3432 psi.

1.4 Track

The track is of conventional design with wooden crossties and a stone ballast section. The ballast is in good condition. The rail is 136 RE with a tie spacing of 20". Standing water is evident in the ballast. The track is curved 5.9 degrees to the right throughout the tunnel.

1.5 Geotechnical

The tunnels in the east-central part of the Pocahontas Division (including Glen Alum) are located in the Appalachian Plateaus Physiographic Province, a region characterized by deeply incised plateaus underlain by flat-lying sedimentary rock. The tunnel itself is lined and no rock was exposed. The description of the site geology at each tunnel is based on our observations of the rockmass at the portals and adjacent cuts and the 1968 West Virginia Geologic Map prepared by the West Virginia Geologic and Economic Survey.

The Glen Alum tunnel is excavated through the Kanawha Formation, a medium- to thick-bedded fine- to medium-grained sandstone, with interbeds of shale, siltstone, and coal. Bedding in the Kanawah Formation is subhorizontal and gently rolls back and forth towards the northwest and

southeast. Joints in the rock cuts of the formations are typically steeply dipping and widely spaced. Most joints are less than 15 feet in length and are not through-going across the exposure face.

The rock quality designation, Q, at the portals was determined to be 16. A Q rating between 10 and 40 is considered "Good" with 10 bordering on "Fair" and 40 bordering on "Very Good." A sample of rock was taken from the portal and tested.

The geoprobes indicate that the top of rock is located between 2.0' to 5.0'(averaging about 3.4') below the top of ballast throughout the tunnel for Main #1 and between 1.75' to 5.0' (averaging about 3.5') below the top of ballast throughout the tunnel for Main #2. Below Main #2, the rock profile has a low point in the center of the tunnel that is probably collecting subsurface water. Top of ballast is typically about 0.8' below top of low rail.

1.6 Clearances

The laser car measurements indicate that the existing tunnel has adequate horizontal clearance for both the "High-Wide Load" and the "Double-Stack Load" portions of the composite clearance envelope throughout the tunnel, except for a concrete drain trough between Main #2 and the right wall which conflicts with the desired clearance template. Encroachment is approximately 12" on the bottom of the clearance template.

For vertical clearance, the "Double Stack" portion of the envelope encroaches on the left side of the tunnel crown by up to 17" in the first 50' from the east portal, and for the rest of the tunnel the vertical clearance is adequate or encroaches by amounts up to 3". On the right side of the tunnel crown, the "Double Stack" portion of the envelope encroaches by some amount for the entire tunnel; the amount varies from 1" to 14", averaging about 6" with the maximum encroachments being in the first 150' from the east portal.

Cross sections of the tunnel clearance encroachments are shown in the drawings at the end of this report. The maximum encroachments are summarized in the table below:

	Crown Encroachment (radial inches)	
Distance (ft) from East Portal	**Left Side**	**Right Side**
0	17	12
55	0	12
104	0	12
202	0	10
303	0	8
403	0	4
505	0	2
554	0	1

	Crown Encroachment (radial inches)	
Distance (ft) from East Portal	Left Side	Right Side
602	0	0
651	0.5	2
704	2	3
804	2	3
851	2	5
901	3	5
1001	3	7
1102	1	8
1201	0	8
1251	7	7
1302	10	6

2. CLEARANCE IMPROVEMENT ALTERNATIVES

Given the magnitude of the vertical clearance deficiency, there are two general alternatives that can be used to obtain the clearance; notching the lining or using steel ties to lower the track. Combinations of the general methods may be required to obtain a design that is cost effective and that can be constructed within reasonable track outages. Track lowering by excavating or undercutting does not appear feasible due to the proximity of the top of rock to the surface.

2.1 Steel Ties

Substitution of steel ties for the standard wood ties would permit the rails to be lowered about 6 inches. Transition sections would be constructed at the tunnel approaches for the vertical curves and for a gradual transition in track stiffness. A proper drainage system is required to minimize corrosion of the ties.

Steel ties would be sufficient to fix the clearance deficiencies in large portions of the tunnel, and in other sections could be used in conjunction with minor notching to provide the desired clearance. However, in this case, due to the close proximity of the rail bridge outside the portals, steel ties would require expensive and impractical bridge modifications in order to lower the bridge. Also, lateral shifting of the track is a concern when using steel ties. Steel ties do not provide any significant advantages that would warrant their expense. Therefore, they will no longer be considered as a viable alternative.

2.2 Notching the Crown

Notching in the upper quadrants of the tunnel would not cut entirely through the liner and could provide the needed additional clearance. If notching is used as the only method to improve

clearance, a minor notching method without rock dowels would be employed for 500' on the left side of the tunnel crown and 400' of the right side of the tunnel. A deep notching scheme including rock dowels may be necessary for 800' of the tunnel crown. The left side of the crown at the east portal is the only location where the encroachment may be too deep to for the deep notching method and would require either crown replacement or partial daylighting of the tunnel at the east portal.

3. PREFERRED ALTERNATIVE

Given the magnitude of the vertical encroachment, the preferred alternative is to use a combination of minor and deep notching, as well as crown replacement at the east portal. Crown replacement is required for 50', deep notching for 800' of the tunnel crown, and minor notching for 500' on the left side of the tunnel crown and 400' on the right side of the tunnel crown.

Drainage improvements are also recommended. Further investigation will be necessary to determine if the existing drainage channel is adequately draining the ballast. Cleaning of the channel may be necessary, along with adding weeps into the channel. Drainage improvements would include any necessary modifications to ensure that the existing concrete drain trough adjacent to Main #2 would not interfere with the desired clearance template. A sump and pump may be needed to drain the low point in the rock profile.

3.1 Preliminary Design

The preliminary design uses a combination of replacement of the liner crown, deep notching, and minor notching. The existing track structure is planned to be flooded with ballast to the top of the rail to provide access into the tunnel for the contractor to work and to protect the track during the construction. The preliminary design also budgets for a new drainage system and undercutting of the track to replace the ballast.

3.2 Schedule

The estimated schedule for completing improvements on this tunnel is twelve (12) weeks from mobilization to demobilization. The schedule assumes one track being closed at a time, for ten hours each day, five days a week. The schedule assumes 12' of crown removal each day over half the tunnel, with concrete removal, rock removal, installation of rock dowels and installation of shotcrete all occurring on the same day for each 12' segment. The installation of rock dowels at a given location would precede the deep notching, but the two operations could occur within the tunnel at different locations at the same time. Drainage improvement operations would be undertaken at the same time as the crown removal or deep notching, but at different locations in the tunnel.

3.3 Estimate

The total estimated cost for achieving clearance at this location is $2.3 million, or $1,800 per foot of tunnel. The work items include mobilization, surveying, liner removal, rock removal,

rock dowels, crown installation, notching, rock cut for drainage trench, tunnel drainage system, ballast cleaning, and demobilization. An allowance for grouting the invert void was also included. The total cost is made up of tunnel, track, signal, and site work items at $1.45 million, plus a 30% construction contingency, a 10% engineering allowance, and a 14% construction management allowance.

4. USGS TOPOGRAPHIC MAP

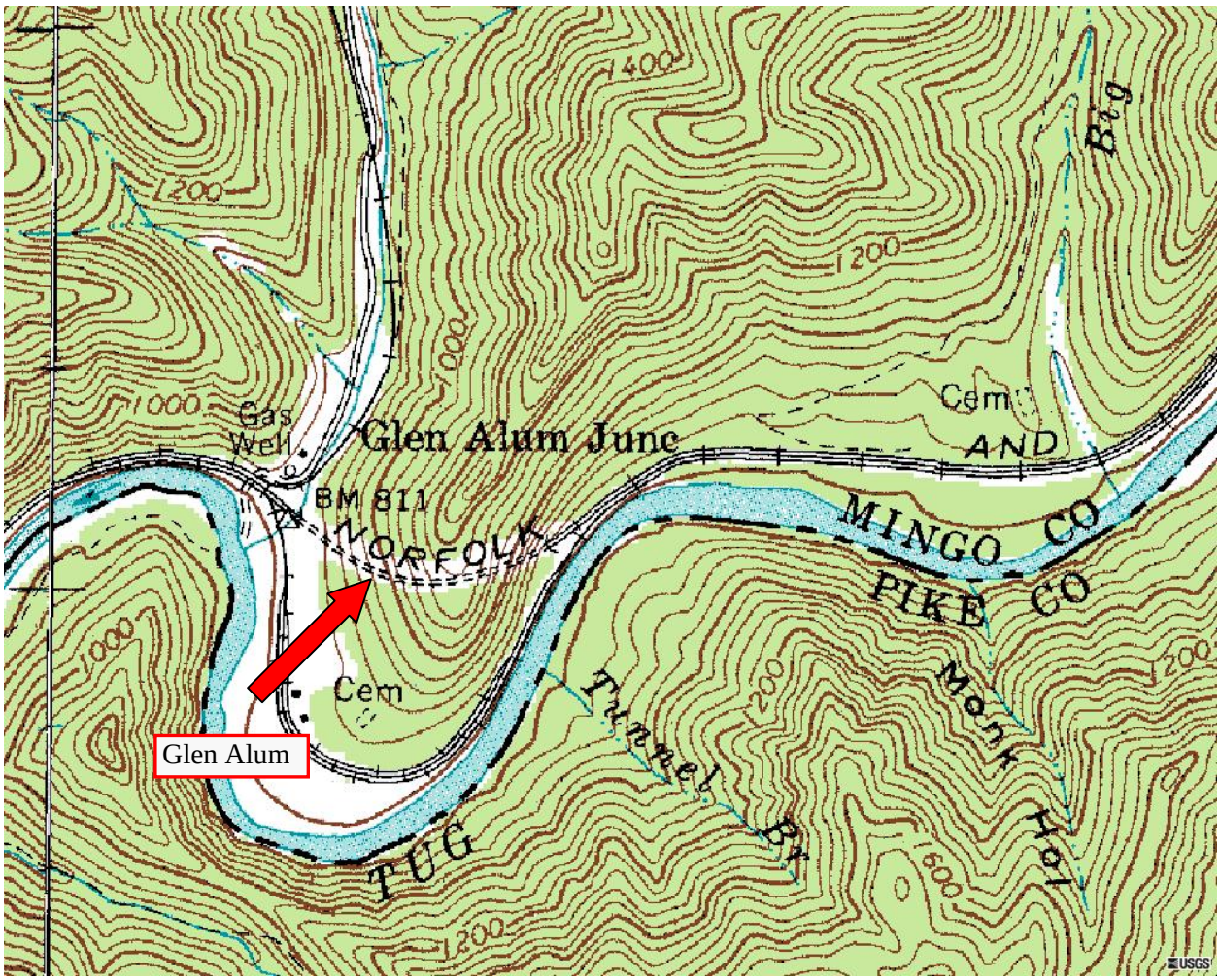

5. AERIAL PHOTO

6. TRACK CHART

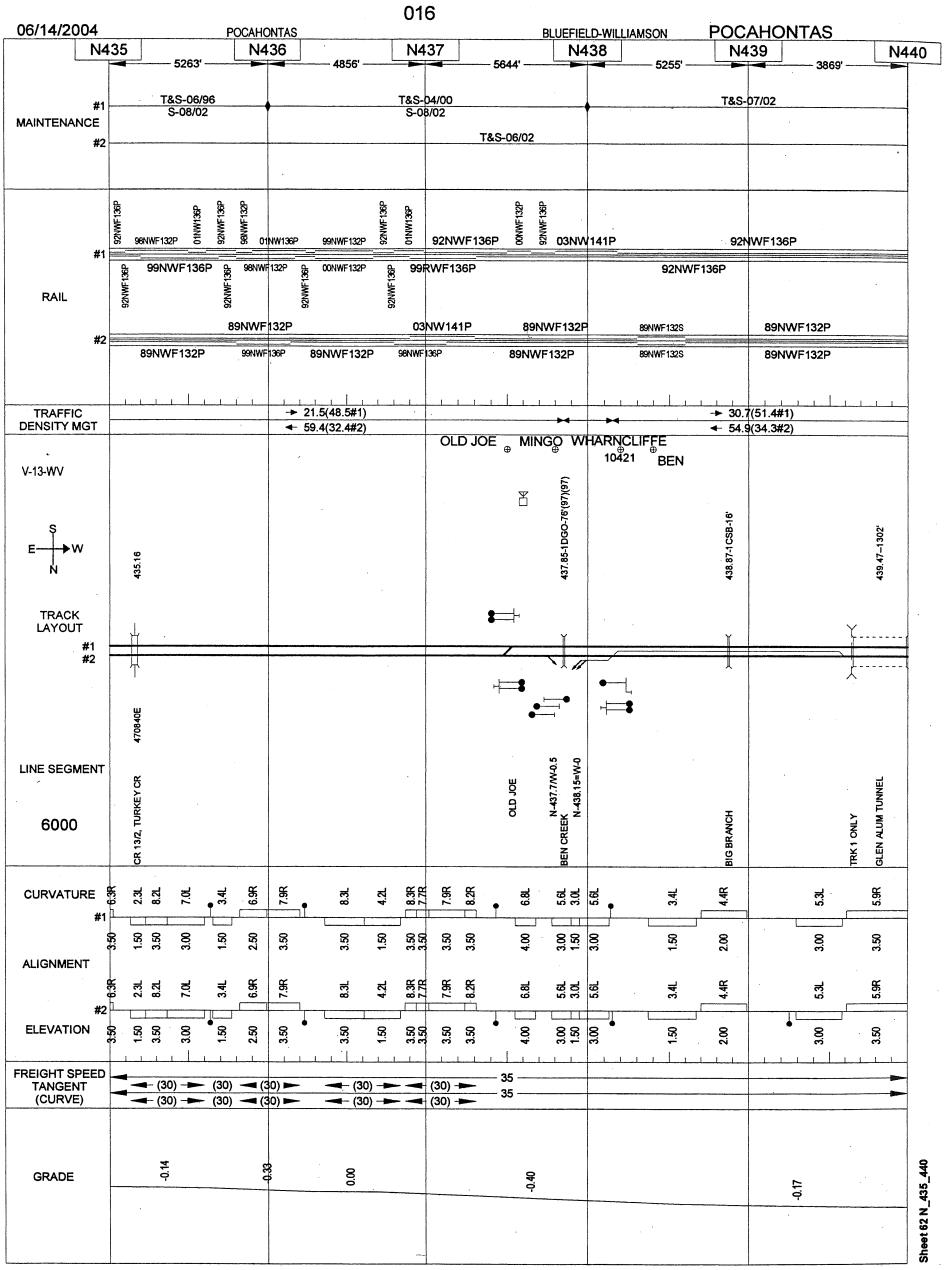

7. PHOTOS

Photo 1. East Portal

Photo 2. View from East Portal

Photo 3. West Portal

Photo 4. View from West Portal

Photo 5. Drainage Channel North Side

Photo 6. Bridge 210' from West Portal

8. ESTIMATE

Glen Alum

Tunnel Length	1302	ft
Tunnel Width	30.5	ft
# of Tracks	2	

	Contractor		Railroad	
Work Window	10	hrs	10	hrs
Setup & Demobilization Allowance	2	hrs	2	hrs
Production Time	8	hrs	8	hrs

Tunnel Work Items	UOM	Quantity	Unit Rate	Total
Mobilization	%	5%		$41,633.75
Surveying	DY	5	$1,300.00	$6,500.00
Minor Notching	LF	900	$70.57	$63,514.13
Deep Notching	LF	900	$213.18	$191,862.93
Rock Dowels 14' with Chain Link Mesh - Crown	EA	83	$637.81	$53,150.93
Rock Dowels 14' with Chain Link Mesh - Wall	EA			
Rock Dowels 16'	EA	800	$285.33	$228,260.00
Crown Removal	SF	2395	$17.08	$40,917.60
Rock Removal - Crown	CY	89	$451.05	$40,017.60
Rock Removal - Wall	CY			
Crown Installation	SF	2395	$25.19	$60,346.66
Rock Cut Drainage Trench	LF	1242	$88.07	$109,387.20
Tunnel Drainage	LF	1242	$17.96	$22,302.00
Demobilization	DY	5	$3,283.20	$16,416.00
Total Tunnel Work Items	**LF**	**1302**	**$671.51**	**$874,308.82**

Trackwork Items	UOM	Quantity	Unit Rate	Total
Mobilization	DY	1	$3,110.32	$3,110.32
Surveying	DY	2	$1,300.00	$2,600.00
Track Preparation/Restoration	DY	3	$3,431.32	$10,293.96
Undercutting	PF	2604	$19.99	$52,059.44
Saw Cuts	EA	6	$6,092.96	$36,557.76
Field Welds	EA	6	$2,698.37	$16,190.25
Surfacing & Lining	PF	7812	$1.98	$15,456.10
Ballasting Track	TN	2604	$39.40	$102,602.64
Equalizing rail	DY	2	$6,701.14	$13,402.28
Total Trackwork Items				**$252,272.75**

Signal Items	UOM	Quantity	Unit Rate	Total
Mobilization	DY			
Relocate Cables / Track Leads	LF	1302	$11.50	$14,977.78
Cut-in	EA			
New CP	EA			
Modify CP	EA			
Grade Crossing - Single to Double Track	EA			
Signal Location Modification	EA			
New Cut Section	EA			
Demobilization	DY			
Total Signal Items				**$14,977.78**

Site Items	UOM	Quantity	Unit Rate	Total
Mobilization	DY	1	$2,483.60	$2,483.60
Erosion & Sedimentation Control	EA	1	$11,958.80	$11,958.80
Site Grading	CY			
Rock Excavation	CY			
Sub-Ballast	CY			
Drainage	LF			
Demobilization	DY			
Total Site Items				**$14,442.40**

Special Items	UOM	Quantity	Unit Rate	Total
Mobilization	DY			
Flagging	DY	56	$821.50	$46,004.00
Flood Track with Ballast for Protection	TN	5208	$39.01	$203,169.08
Remove Flooded Ballast	TN	5208	$9.40	$48,948.91
Temporary Bridges	EA			
New Railroad Bridges	EA			
New Highway Bridges	EA			
Invert/Crown Void Grouting	DY			
Demobilization	DY			
Total Specialty Items				**$298,122.00**

Subtotal All Items		**$1,454,123.74**
Construction Contingency	**30%**	**$436,237.12**
Engineering Allowance	**10%**	**$189,036.09**
Construction Management Allowance	**14%**	**$264,650.52**
Total		**$2,344,047.47**

9. DRAWINGS

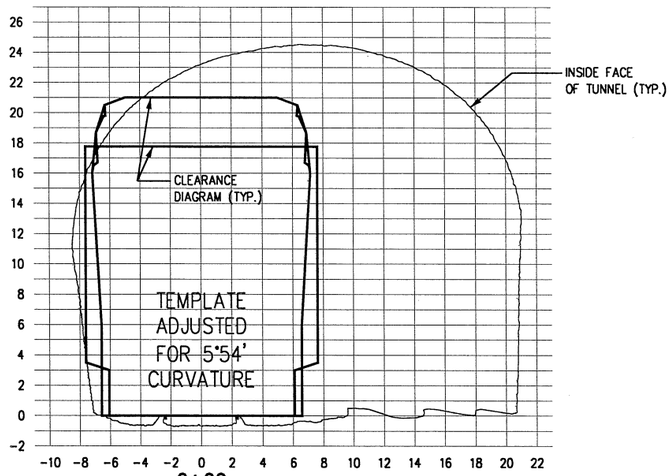

0+00

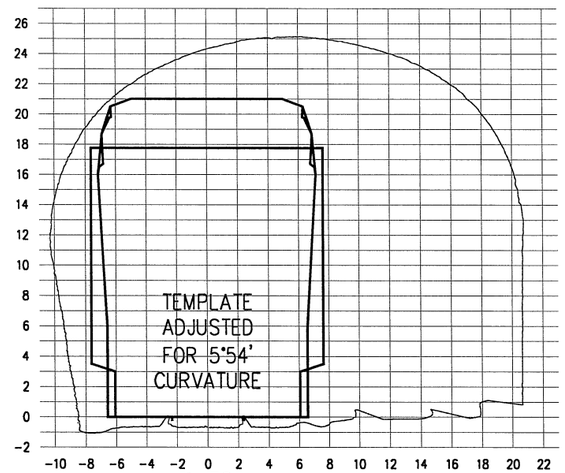

1+52

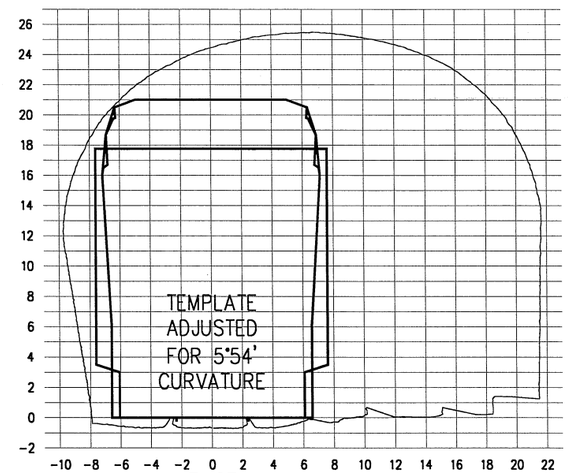

3+03

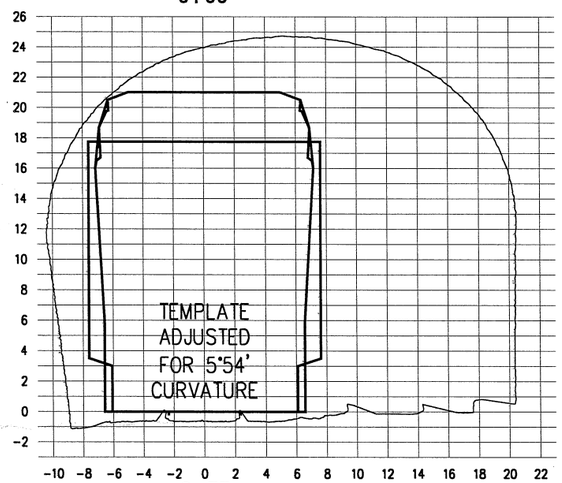

0+55

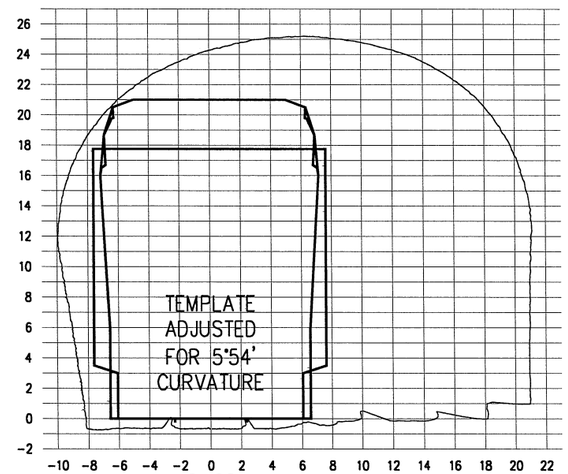

2+02

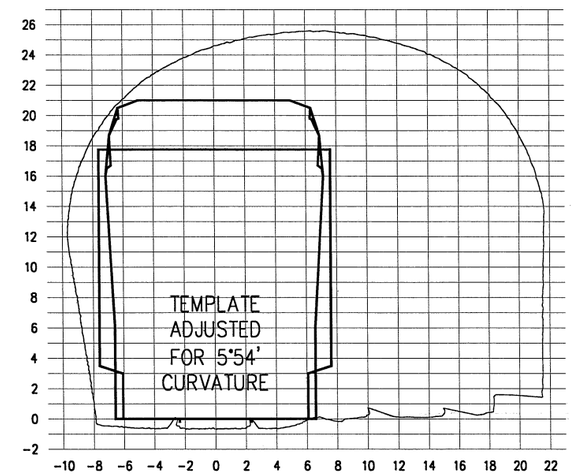

3+51

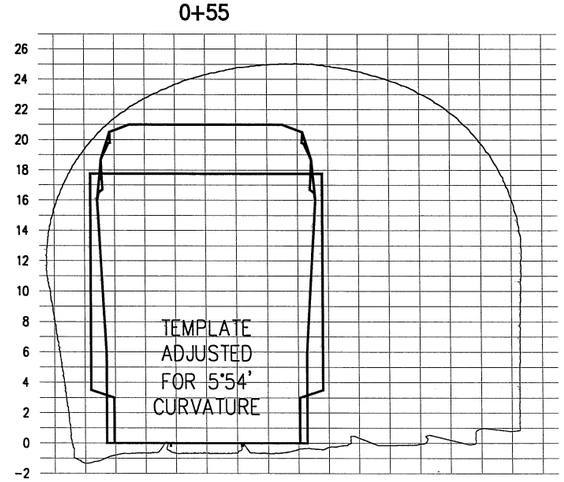

1+04

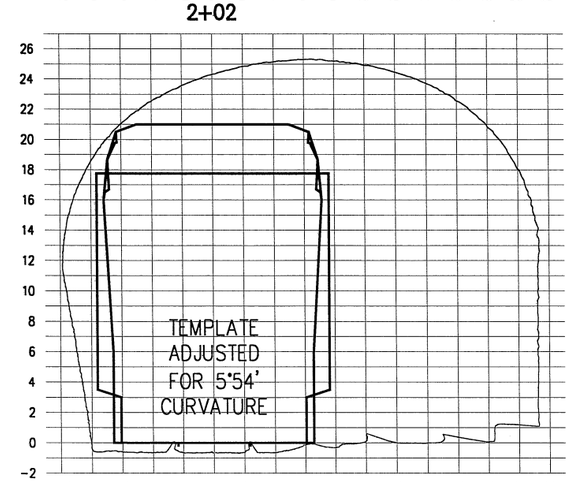

2+52

NOTES:

1. HORIZONTAL DATUM IS PARALLEL TO TRACK. WHERE TRACK IS SUPERELEVATED, DATUM IS NOT PARALLEL WITH GROUND.
2. CROSS SECTION GIVEN FOR STA. 0+00 IS A COMPOSITE FOR THE TUNNEL FROM STA. 0+00 THROUGH 0+50. ALL OF THE SECTIONS FOLLOW THIS CONVENTION.

NOT FOR CONSTRUCTION

SCALE: 1" = 100'

50 0 100 200 300

Hatch Mott MacDonald

NORFOLK SOUTHERN

OWNING COMPANY
POCAHONTAS
OPERATING DIVISION
OFFICE OF THE CHIEF ENGINEER - DESIGN AND CONSTRUCTION - ATLANTA, GA.

REV	BY	DATE	DESCRIPTION
P1	DJL	8/5/05	PRELIMINARY ENGINEERING PHASE REPORT

LOCATION: GLEN ALUM TUNNEL, GLEN ALUM, WV

TITLE: TUNNEL CLEARANCE CROSS SECTIONS MAIN #1 – 1 OF 8

DGN | PID No. | VRN 16317 & 16318 | MILE POST N-439.47
DWN | FILE No. | DRAWING NUMBER
CHK | DATE APRIL 22, 2005

FILE NAME = p:\NSR\29399\CAD\LASER CAR INFO\439.47 glen_alum_mo1n1.dgn
DATE/TIME = 08/1/2005 11:43:31 AM

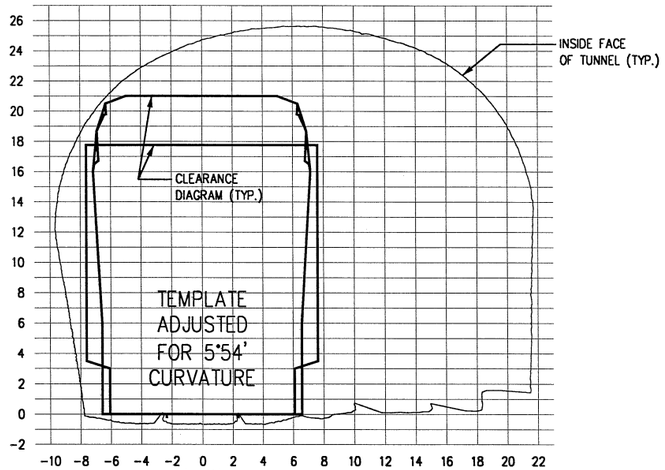

4+03

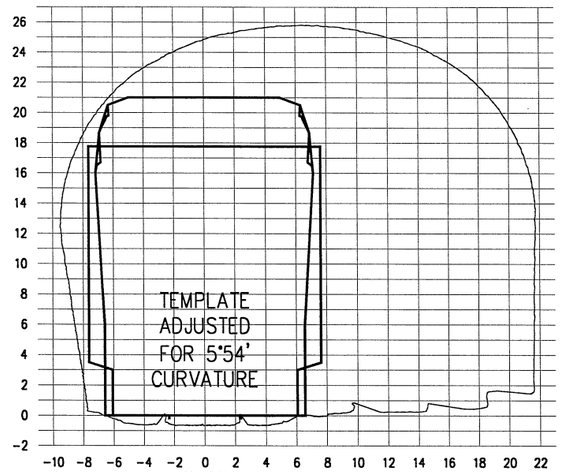

5+51

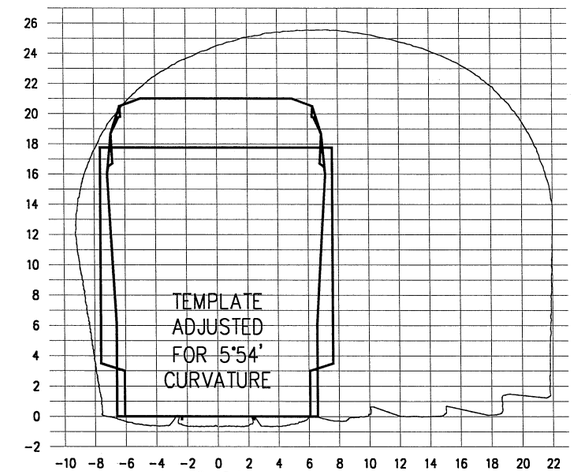

7+04

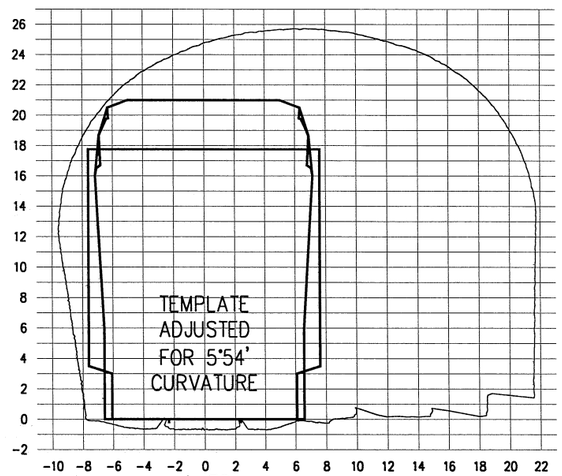

4+52

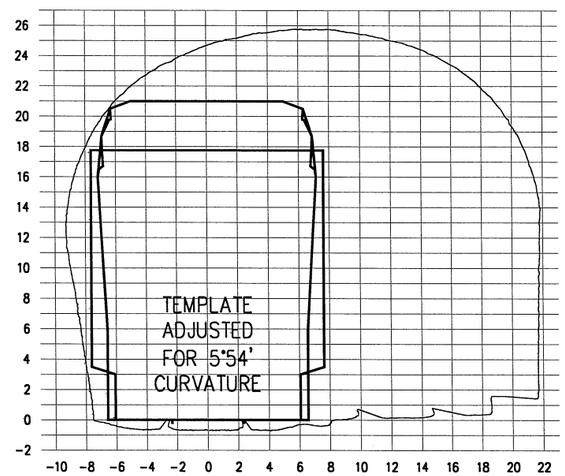

6+02

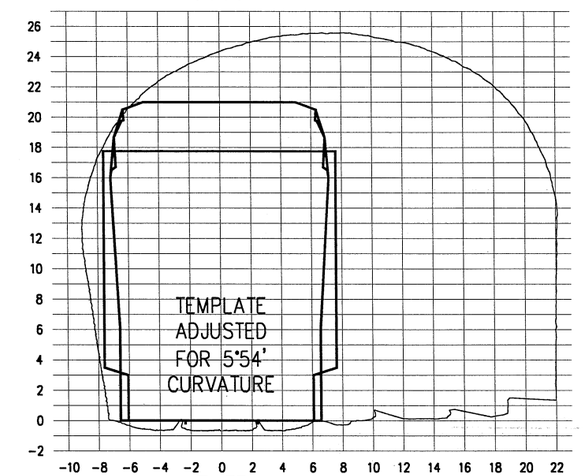

7+53

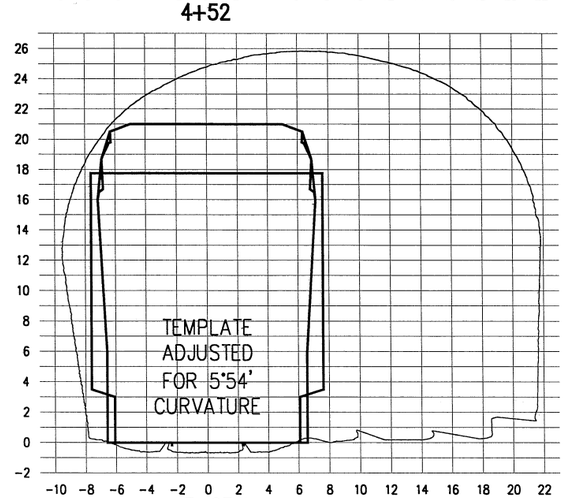

5+05

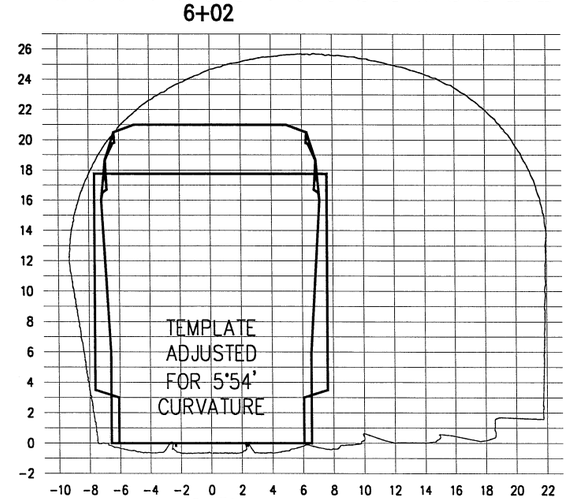

6+51

NOTES:

1. HORIZONTAL DATUM IS PARALLEL TO TRACK. WHERE TRACK IS SUPERELEVATED, DATUM IS NOT PARALLEL WITH GROUND.
2. CROSS SECTION GIVEN FOR STA. 0+00 IS A COMPOSITE FOR THE TUNNEL FROM STA. 0+00 THROUGH 0+50. ALL OF THE SECTIONS FOLLOW THIS CONVENTION.

NOT FOR CONSTRUCTION

SCALE: 1" = 100'

50 0 100 200 300

Hatch Mott MacDonald

NORFOLK SOUTHERN

OWNING COMPANY
POCAHONTAS
OPERATING DIVISION
OFFICE OF THE CHIEF ENGINEER - DESIGN AND CONSTRUCTION - ATLANTA, GA.

REV	BY	DATE	DESCRIPTION
P1	DJL	8/5/05	PRELIMINARY ENGINEERING PHASE REPORT

LOCATION: GLEN ALUM TUNNEL, GLEN ALUM, WV

TITLE: TUNNEL CLEARANCE CROSS SECTIONS MAIN #1 - 2 OF 8

DGN | PID No. | VIN 16317 & 16318 | MILE POST N-439.47
DWN | FILE No. | DRAWING NUMBER
CHK | DATE APRIL 22, 2005

FILE NAME = p:\NSR\29399\CAD\LASER CAR INFO\439.47 glen_alum_main1.dgn
DATE/TIME = 08/11/2005 10:45:53 AM

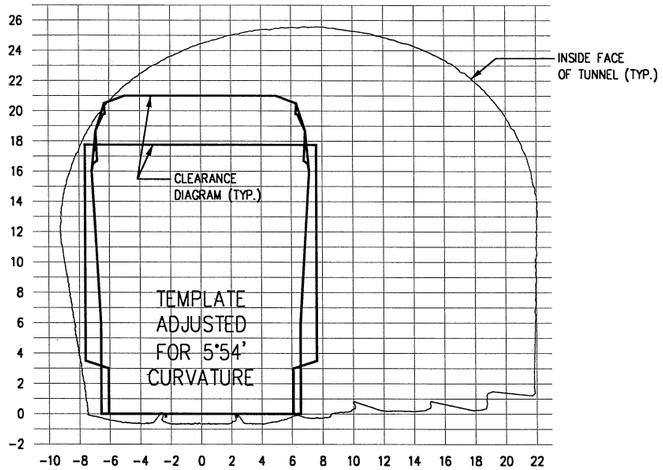

8+04

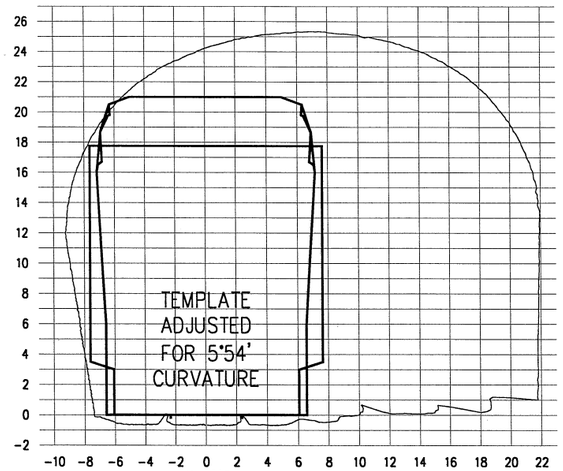

9+51

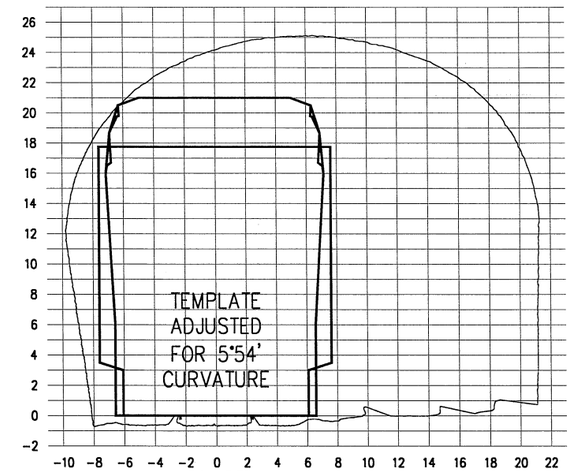

11+02

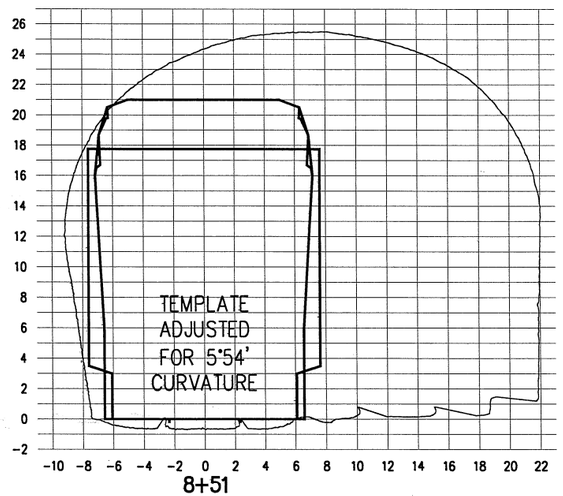

8+51

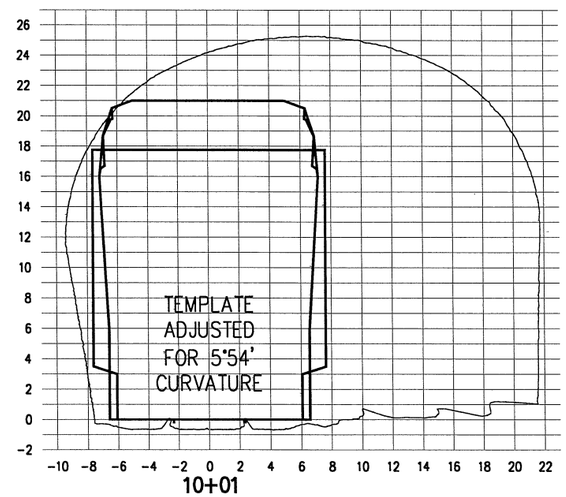

10+01

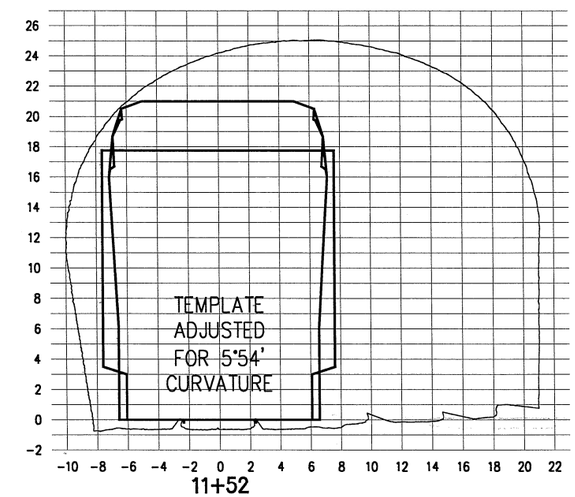

11+52

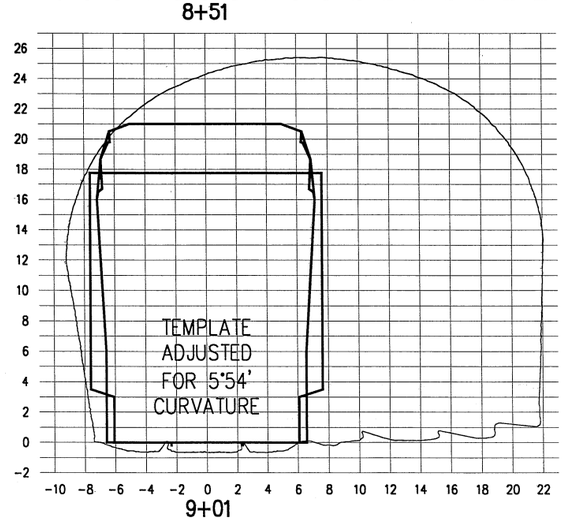

9+01

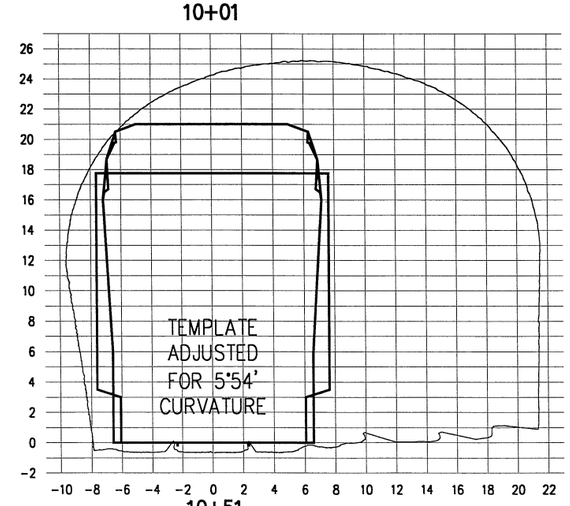

10+51

NOTES:

1. HORIZONTAL DATUM IS PARALLEL TO TRACK. WHERE TRACK IS SUPERELEVATED, DATUM IS NOT PARALLEL WITH GROUND.
2. CROSS SECTION GIVEN FOR STA. 0+00 IS A COMPOSITE FOR THE TUNNEL FROM STA. 0+00 THROUGH 0+50. ALL OF THE SECTIONS FOLLOW THIS CONVENTION.

NOT FOR CONSTRUCTION

SCALE: 1" = 100'

50 0 100 200 300

Hatch Mott MacDonald

NORFOLK SOUTHERN

OWNING COMPANY
POCAHONTAS
OPERATING DIVISION
OFFICE OF THE CHIEF ENGINEER - DESIGN AND CONSTRUCTION - ATLANTA, GA.

REV	BY	DATE	DESCRIPTION
P1	DJL	8/5/05	PRELIMINARY ENGINEERING PHASE REPORT

LOCATION: GLEN ALUM TUNNEL, GLEN ALUM, WV

TITLE: TUNNEL CLEARANCE CROSS SECTIONS MAIN #1 - 3 OF 8

DGN	PID No.	VRN	16317 & 16318	MILE POST	N-439.47
DWN	FILE No.			DRAWING NUMBER	
CHK	DATE	APRIL 22, 2005			

FILE NAME = p:\NSR\29399\CAD\LASER CAR INFO\439.47 glen_alum_mainl.dgn
DATE/TIME = 08/11/2005 11:14:08 AM

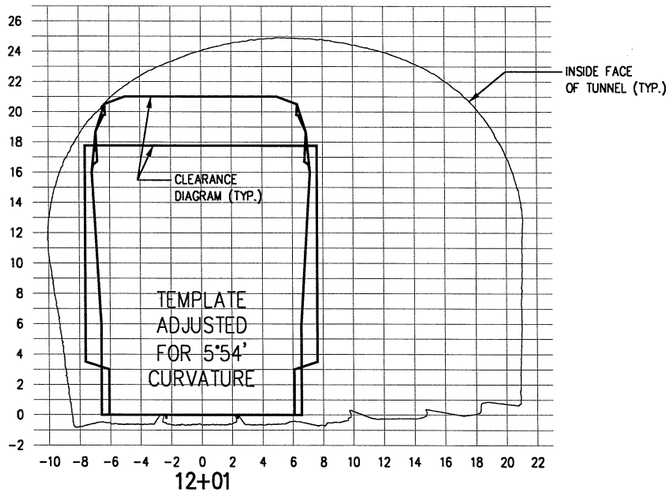

12+01

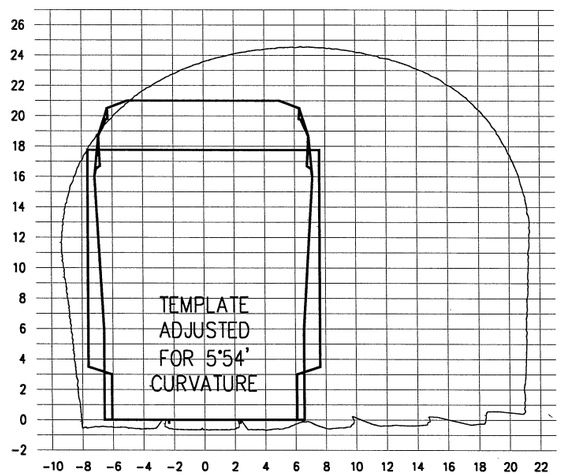

12+51

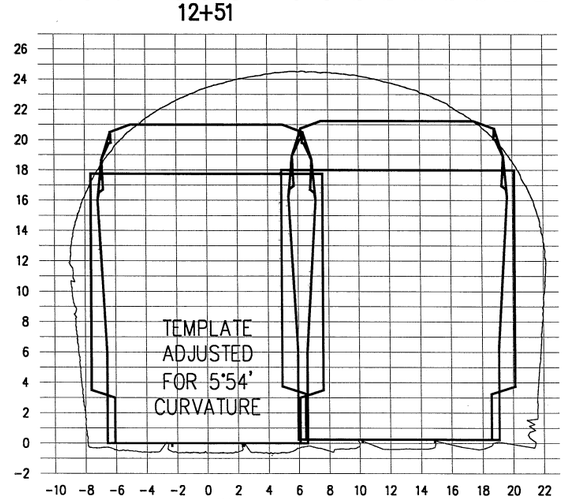

13+02

NOTES:

1. HORIZONTAL DATUM IS PARALLEL TO TRACK. WHERE TRACK IS SUPERELEVATED, DATUM IS NOT PARALLEL WITH GROUND.
2. CROSS SECTION GIVEN FOR STA. 0+00 IS A COMPOSITE FOR THE TUNNEL FROM STA. 0+00 THROUGH 0+50. ALL OF THE SECTIONS FOLLOW THIS CONVENTION.

NOT FOR CONSTRUCTION

SCALE: 1"=100'

50 0 100 200 300

Hatch Mott MacDonald

NORFOLK SOUTHERN

OWNING COMPANY
POCAHONTAS
OPERATING DIVISION
OFFICE OF THE CHIEF ENGINEER - DESIGN AND CONSTRUCTION - ATLANTA, GA.

REV	BY	DATE	DESCRIPTION

LOCATION: GLEN ALUM TUNNEL, GLEN ALUM, WV

TITLE: TUNNEL CLEARANCE CROSS SECTIONS MAIN #1 - 4 OF 8

DGN	PID No.	VRN 16317 & 16318	MILE POST N-439.47
DWN	FILE No.		DRAWING NUMBER
CHK	DATE APRIL 22, 2005		

FILE NAME = p:\NSR\29399\CAD\LASER CAR INFO\439.47 glen_alum_mainl.dgn
DATE/TIME = 08/11/2005 11:15:16 AM

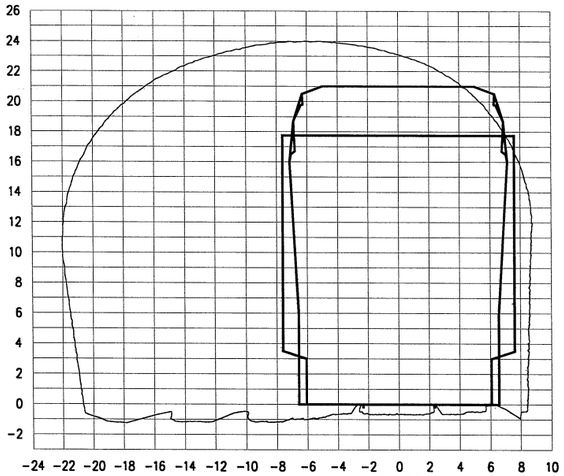

0+00

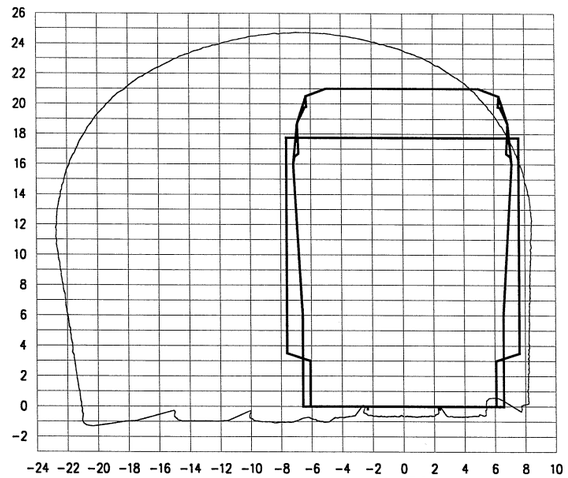

1+54

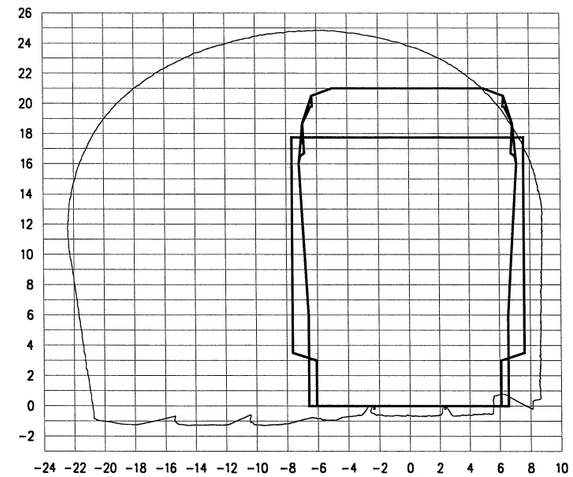

3+04

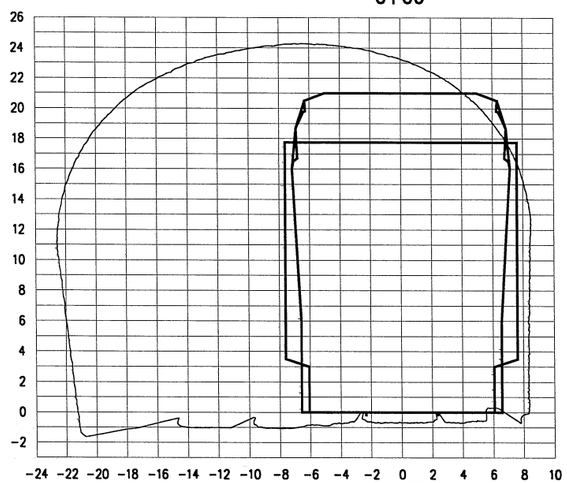

0+53

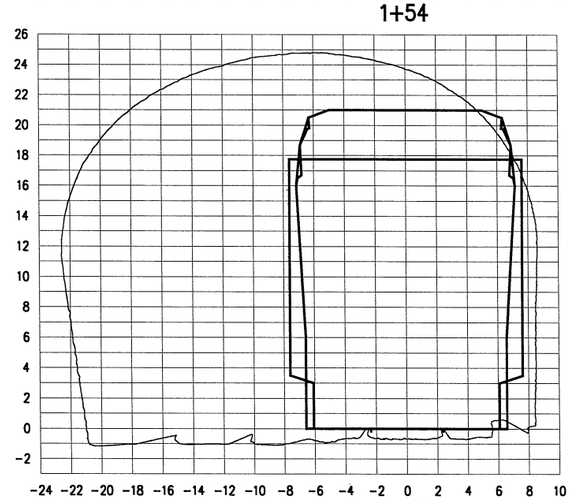

2+04

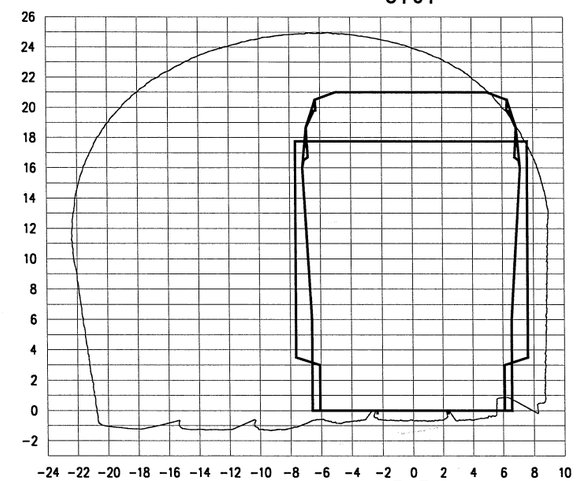

3+51

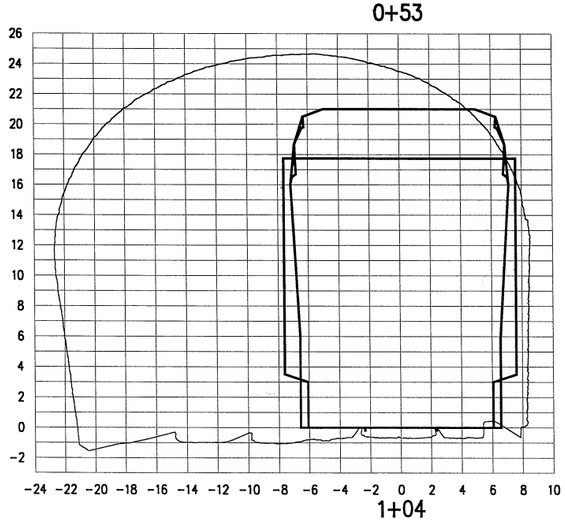

1+04

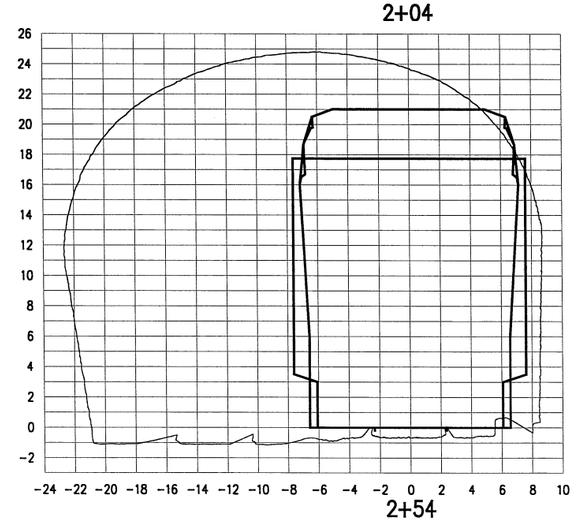

2+54

NOTES:

1. HORIZONTAL DATUM IS PARALLEL TO TRACK. WHERE TRACK IS SUPERELEVATED, DATUM IS NOT PARALLEL WITH GROUND.
2. CROSS SECTION GIVEN FOR STA. 0+00 IS A COMPOSITE FOR THE TUNNEL FROM STA. 0+00 THROUGH 0+50. ALL OF THE SECTIONS FOLLOW THIS CONVENTION.

NOT FOR CONSTRUCTION

SCALE: 1" = 100'

50 0 100 200 300

Hatch Mott MacDonald

NORFOLK SOUTHERN

OWNING COMPANY
POCAHONTAS
OPERATING DIVISION
OFFICE OF THE CHIEF ENGINEER - DESIGN AND CONSTRUCTION - ATLANTA, GA.

REV	BY	DATE	DESCRIPTION
P1	DJL	8/5/05	PRELIMINARY ENGINEERING PHASE REPORT

LOCATION: GLEN ALUM TUNNEL, GLEN ALUM, WV

TITLE: TUNNEL CLEARANCE CROSS SECTIONS MAIN #2 - 5 OF 8

DGN	PID No.	VRN 16317 & 16318	MILE POST N-439.47
DWN	FILE No.		DRAWING NUMBER
CHK	DATE APRIL 22, 2005		

FILE NAME = p:\NSR\29399\CAD\LASER CAR INFO\439.47 glen_alum_main2.dgn
DATE/TIME = 08/11/2005 11:21:49 AM

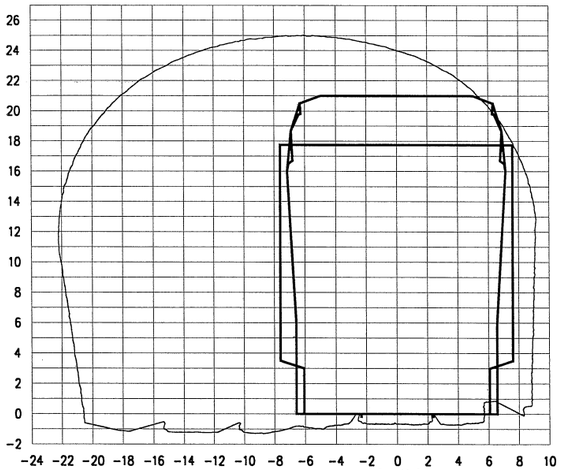

4+04

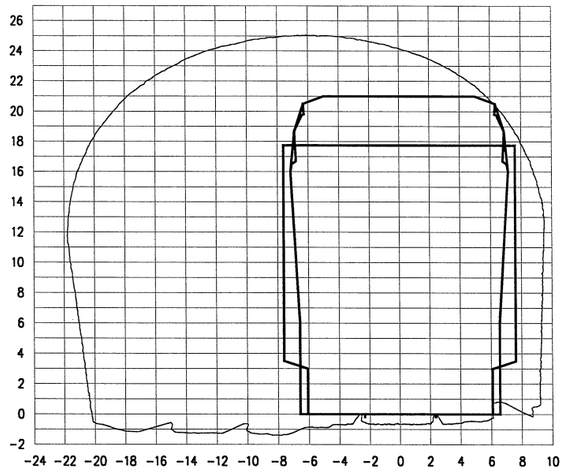

5+54

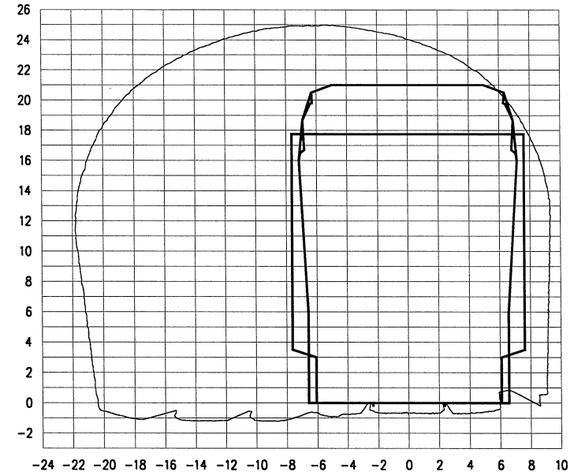

7+04

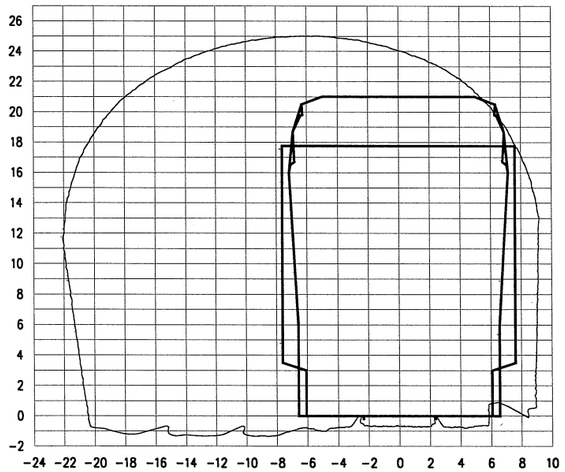

4+50

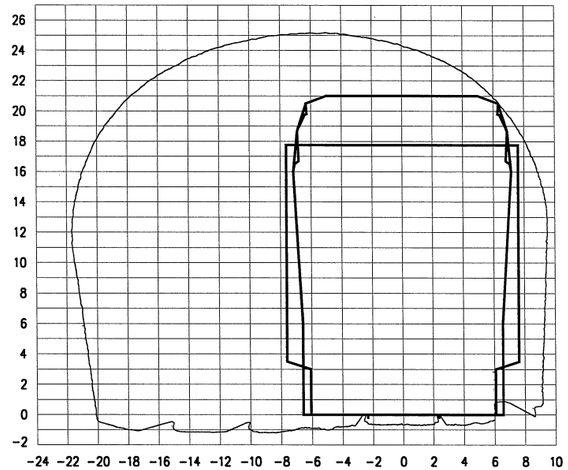

6+02

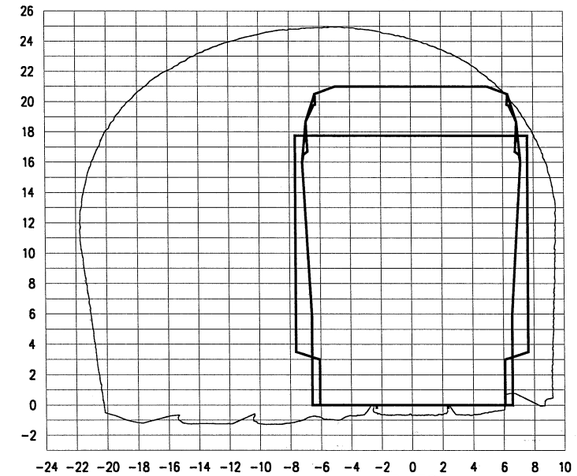

7+50

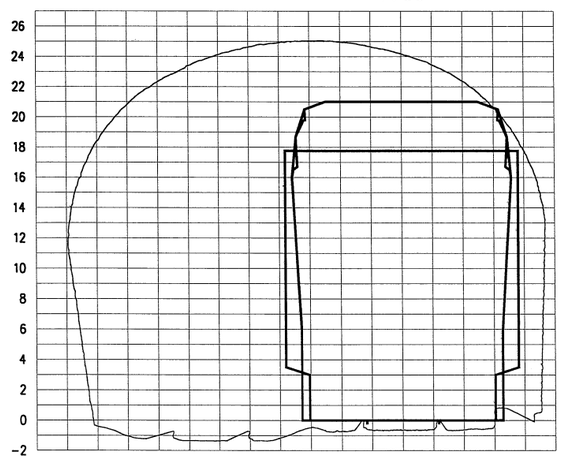

5+01

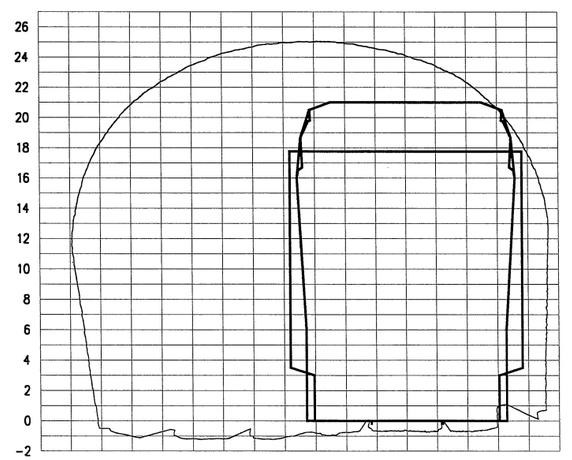

6+51

NOTES:

1. HORIZONTAL DATUM IS PARALLEL TO TRACK. WHERE TRACK IS SUPERELEVATED, DATUM IS NOT PARALLEL WITH GROUND.

2. CROSS SECTION GIVEN FOR STA. 0+00 IS A COMPOSITE FOR THE TUNNEL FROM STA. 0+00 THROUGH 0+50. ALL OF THE SECTIONS FOLLOW THIS CONVENTION.

NOT FOR CONSTRUCTION

SCALE: 1"=100'

50 0 100 200 300

Hatch Mott MacDonald

NORFOLK SOUTHERN

OWNING COMPANY
POCAHONTAS
OPERATING DIVISION
OFFICE OF THE CHIEF ENGINEER - DESIGN AND CONSTRUCTION - ATLANTA, GA.

REV	INIT	DATE	DESCRIPTION
P1	DJL	8/5/05	PRELIMINARY ENGINEERING PHASE REPORT

LOCATION: GLEN ALUM TUNNEL, GLEN ALUM, WV

TITLE: TUNNEL CLEARANCE CROSS SECTIONS MAIN #2 - 6 OF 8

DSN	PID No.	VRN 16317 & 16318	MILE POST N-439.47
DWN	FILE No.		DRAWING NUMBER
CHK	DATE APRIL 22, 2005		

FILE NAME = p:\MSR\29339\CAD\LASER CAR INFO\439.47 glen_alum_mch2.dgn
DATE/TIME = 08/1/2005 11:22:13 AM

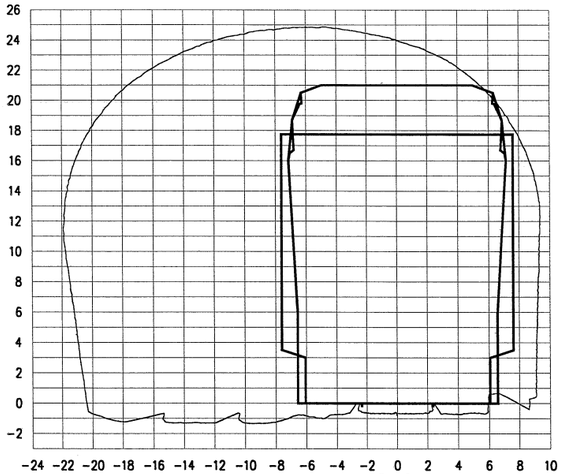

8+01

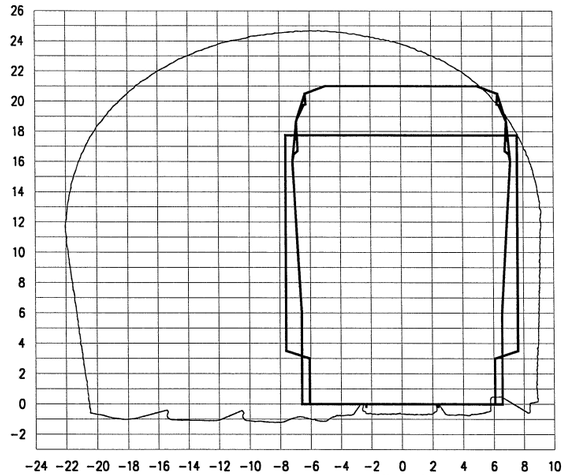

9+51

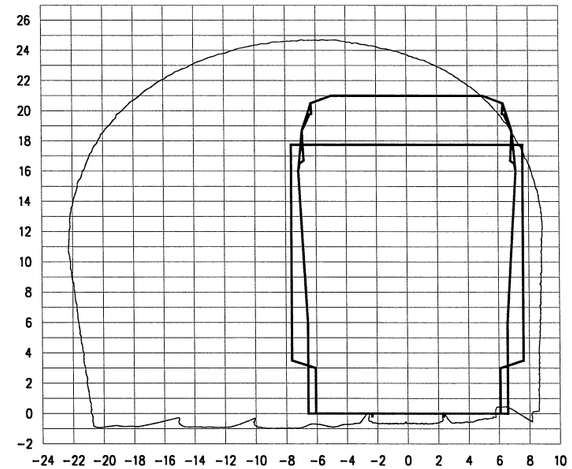

11+02

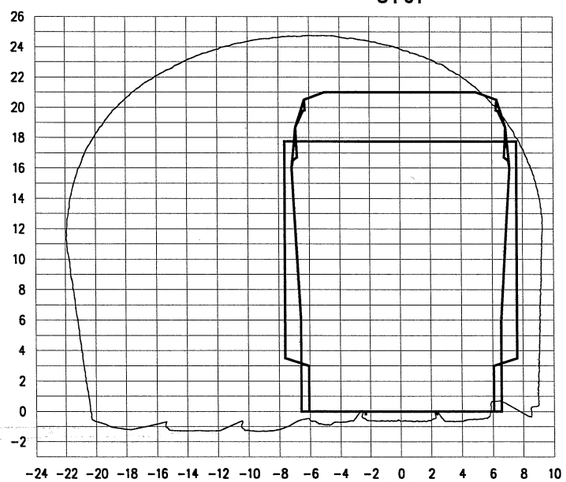

8+51

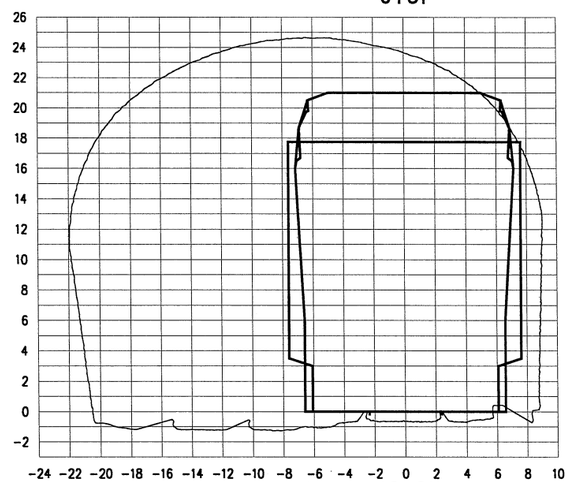

10+01

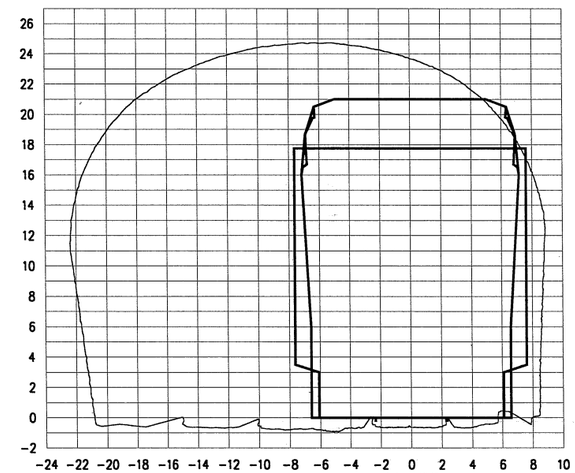

11+55

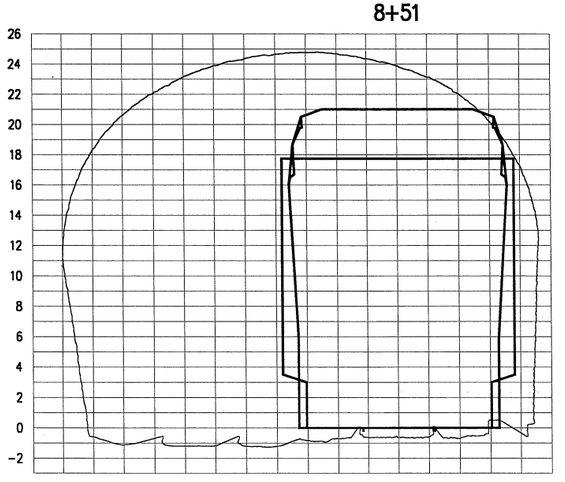

9+03

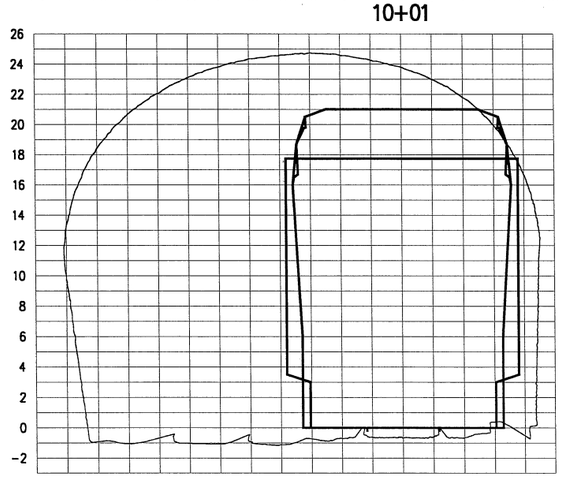

10+52

NOTES:

1. HORIZONTAL DATUM IS PARALLEL TO TRACK. WHERE TRACK IS SUPERELEVATED, DATUM IS NOT PARALLEL WITH GROUND.
2. CROSS SECTION GIVEN FOR STA. 0+00 IS A COMPOSITE FOR THE TUNNEL FROM STA. 0+00 THROUGH 0+50. ALL OF THE SECTIONS FOLLOW THIS CONVENTION.

NOT FOR CONSTRUCTION

SCALE: 1"=100'

50 0 100 200 300

Hatch Mott MacDonald

NORFOLK SOUTHERN

OWNING COMPANY
POCAHONTAS
OPERATING DIVISION
OFFICE OF THE CHIEF ENGINEER - DESIGN AND CONSTRUCTION - ATLANTA, GA.

REV	BY	DATE	DESCRIPTION
P1	DJL	8/5/05	PRELIMINARY ENGINEERING PHASE REPORT

LOCATION: GLEN ALUM TUNNEL, GLEN ALUM, WV

TITLE: TUNNEL CLEARANCE CROSS SECTIONS MAIN #2 - 7 OF 8

DGN	PID No.	VIN 16317 & 16318	MILE POST N-439.47
DWN	FILE No.		DRAWING NUMBER
CHK	DATE APRIL 22, 2005		

FILE NAME = p:\NSR\29399\CADD\LASER CAR INFO\439.47 glen_alum_mdn2.dgn
DATE/TIME = 08/4/2005 11:23:30 AM

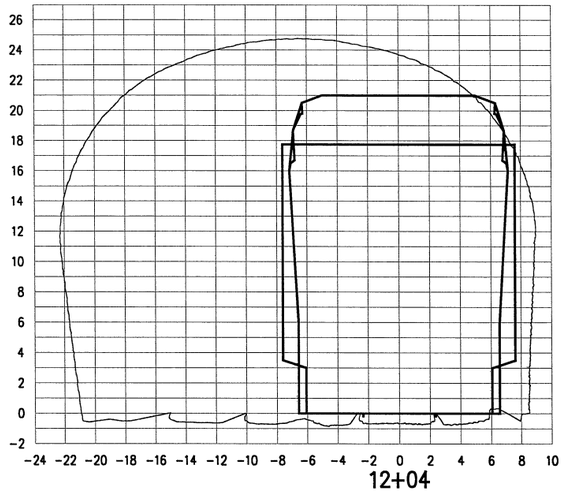

12+04

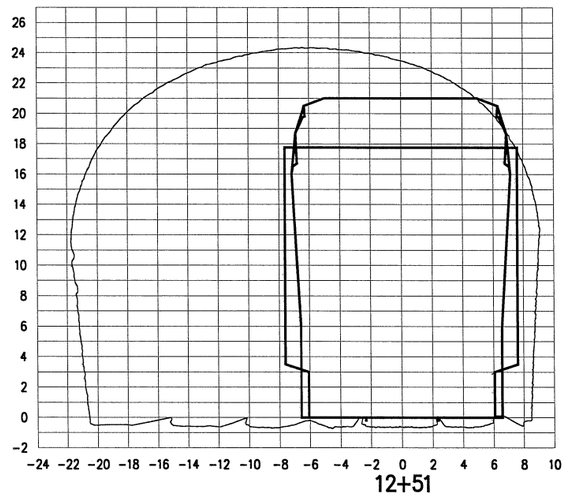

12+51

NOTES:

1. HORIZONTAL DATUM IS PARALLEL TO TRACK. WHERE TRACK IS SUPERELEVATED, DATUM IS NOT PARALLEL WITH GROUND.
2. CROSS SECTION GIVEN FOR STA. 0+00 IS A COMPOSITE FOR THE TUNNEL FROM STA. 0+00 THROUGH 0+50. ALL OF THE SECTIONS FOLLOW THIS CONVENTION.

NOT FOR CONSTRUCTION

SCALE: 1"=100'

50 0 100 200 300

Hatch Mott MacDonald

NORFOLK SOUTHERN

OWNING COMPANY
POCAHONTAS
OPERATING DIVISION
OFFICE OF THE CHIEF ENGINEER - DESIGN AND CONSTRUCTION - ATLANTA, GA.

REV	BY	DATE	DESCRIPTION
P1	DJL	8/5/05	PRELIMINARY ENGINEERING PHASE REPORT

LOCATION: GLEN ALUM TUNNEL, GLEN ALUM, WV

TITLE: TUNNEL CLEARANCE CROSS SECTIONS MAIN #2 - 8 OF 8

DGN	PID No.	VRN 16317 & 16318	MILE POST N-439.47
DWN	FILE No.		DRAWING NUMBER
CHK	DATE APRIL 22, 2005		

FILE NAME = p:\NSR\219399\CAD\LASER CAR INFO\439.47 glen_alum_main2.dgn
DATE/TIME = 08/11/2005 11:22:31 AM

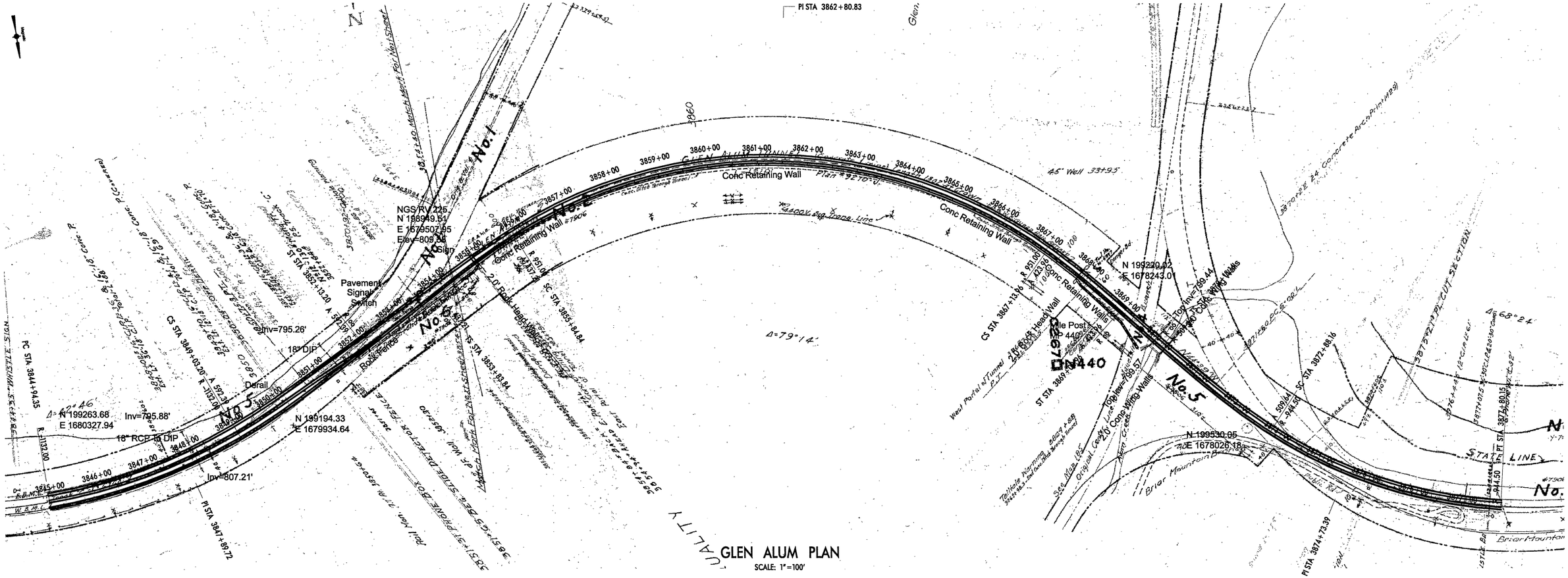

GLEN ALUM PLAN

SCALE: 1"=100'

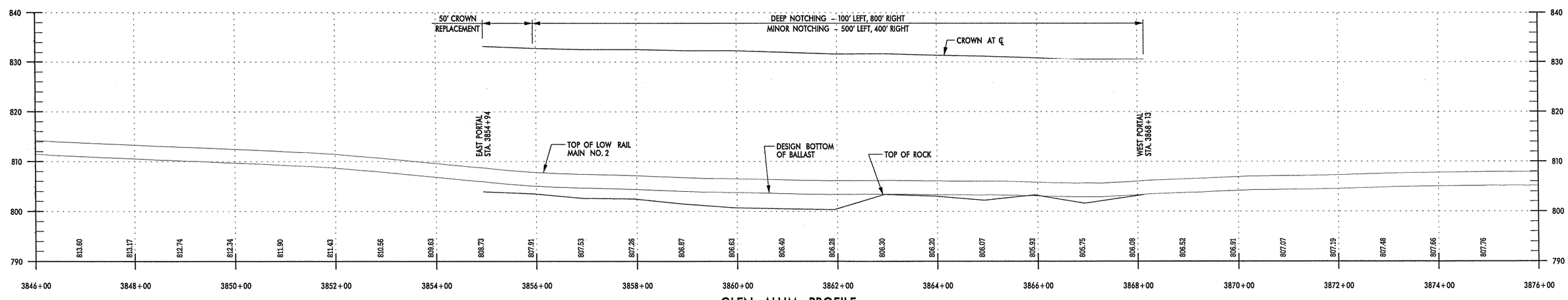

GLEN ALUM PROFILE

SCALE: 1"=100' HORIZ.
1"=10' VERT.

NOT FOR CONSTRUCTION

SCALE: 1"=100'

50 0 100 200 300

Hatch Mott MacDonald

NORFOLK SOUTHERN

OWNING COMPANY
POCAHONTAS
OPERATING DIVISION
OFFICE OF THE CHIEF ENGINEER – DESIGN AND CONSTRUCTION – ATLANTA, GA.

REV	BY	DATE	DESCRIPTION
P2	DJL	10/14/05	PRELIMINARY ENGINEERING PHASE REPORT
P1	DJL	8/16/05	PRELIMINARY ENGINEERING PHASE REPORT

LOCATION: GLEN ALUM TUNNEL, GLEN ALUM, WV

TITLE: PLAN AND PROFILE

DGN	PID No.	VRN	16317 & 16318	MILE POST	N-439.47
DWN	FILE No.			DRAWING NUMBER	
CHK	DATE APRIL 22, 2005				

FILE NAME = P:\NSR\29399\CAD\survey Info\439.47 Glen Alum\439.47 Glen Alum.dgn
DATE/TIME = 10/12/2005 03:06:20 PM

GLEN ALUM CURVE DATA

Description:			
Horizontal Alignment Name:	1		
Description:			
Style:			
Input Factor:	1.0000		
	STATION	NORTHING	EASTING
Element: Circular			
PC (2)	3844+94.35	199324.65	1680413.74
PI ( )	3847+01.10	199321.02	1680207.03
CC (6)		198192.83	1680433.65
CS (7)	3849+03.20	199244.55	1680014.95
Radius:	1132.00		
Delta:	20°42' 01" Left		
Degree of Curvature(Chord):	5°03' 47"		
Length:	408.98		
Length(Chorded):	408.85		
Tangent:	206.74		
Chord:	406.76		
Middle Ordinate:	18.42		
External:	18.72		
Tangent Direction:	268°59' 33"		
Radial Direction:	358°59' 33"		
Chord Direction:	258°38' 32"		
Radial Direction:	338°17' 31"		
Tangent Direction:	248°17' 31"		
Element: Clothoid			
CS (7)	3849+03.20	199244.55	1680014.95
SPI (8)	3850+06.72	199206.26	1679918.77
ST (9)	3852+13.20	199104.22	1679738.81
Entrance Radius:	1132.00		
Exit Radius:	0.00		
Length:	310.00		
Angle:	7°50' 43" Left		
Constant:	592.39		
Long Tangent:	206.87		
Short Tangent:	103.52		
Long Chord:	309.74		
Xs:	309.42		
Ys:	14.13		
P:	3.53		
K:	154.90		
Tangent Direction:	248°17' 31"		
Radial Direction:	338°17' 31"		
Chord Direction:	243°03' 41"		
Radial Direction:	330°26' 48"		
Tangent Direction:	240°26' 48"		
Element: Linear			
ST (9)	3852+13.20	199104.22	1679738.81
TS (3)	3853+83.84	199020.06	1679590.38
Tangent Direction:	240°26' 48"		
Tangent Length:	170.64		
Element: Clothoid			
TS (3)	3853+83.84	199020.06	1679590.38
SPI (10)	3855+17.92	198953.93	1679473.74
SC (11)	3855+84.84	198927.18	1679412.23
Entrance Radius:	0.00		
Exit Radius:	951.00		
Length:	201.00		
Angle:	6°03' 18" Right		
Constant:	437.21		
Long Tangent:	134.08		
Short Tangent:	67.07		
Long Chord:	200.90		
Xs:	200.78		
Ys:	7.07		
P:	1.77		
K:	100.46		
Tangent Direction:	240°26' 48"		
Radial Direction:	330°26' 48"		
Chord Direction:	242°27' 54"		
Radial Direction:	336°30' 06"		
Tangent Direction:	246°30' 06"		
Element: Circular			
SC (11)	3855+84.84	198927.18	1679412.23
PI ( )	3862+27.00	198671.14	1678823.32
CC (12)		199799.32	1679033.05
CS (13)	3867+13.96	199121.72	1678365.77
Radius:	951.00		
Delta:	68°03' 30" Right		
Degree of Curvature(Chord):	6°01' 39"		
Length:	1129.64		
Length(Chorded):	1129.12		
Tangent:	642.16		
Chord:	1064.39		
Middle Ordinate:	162.86		
External:	196.51		
Tangent Direction:	246°30' 06"		
Radial Direction:	336°30' 06"		
Chord Direction:	280°31' 51"		
Radial Direction:	44°33' 36"		
Tangent Direction:	314°33' 36"		

GLEN ALUM CURVE DATA CONT.

Element: Clothoid			
CS (13)	3867+13.96	199121.72	1678365.77
SPI (14)	3867+77.02	199165.96	1678320.84
ST (15)	3869+02.96	199262.89	1678240.24
Entrance Radius:	951.00		
Exit Radius:	0.00		
Length:	189.00		
Angle:	5°41' 36" Right		
Constant:	423.96		
Long Tangent:	126.07		
Short Tangent:	63.06		
Long Chord:	188.92		
Xs:	188.81		
Ys:	6.26		
P:	1.56		
K:	94.47		
Tangent Direction:	314°33' 36"		
Radial Direction:	44°33' 36"		
Chord Direction:	318°21' 21"		
Radial Direction:	50°15' 13"		
Tangent Direction:	320°15' 13"		
Element: Linear			
ST (15)	3869+02.96	199262.89	1678240.24
TS (4)	3870+13.16	199347.63	1678169.77
Tangent Direction:	320°15' 13"		
Tangent Length:	110.20		
Element: Clothoid			
TS (4)	3870+13.16	199347.63	1678169.77
SPI (16)	3871+96.70	199488.75	1678052.42
SC (17)	3872+88.16	199550.10	1677984.07
Entrance Radius:	0.00		
Exit Radius:	944.50		
Length:	275.00		
Angle:	8°20' 28" Left		
Constant:	509.64		
Long Tangent:	183.54		
Short Tangent:	91.85		
Long Chord:	274.74		
Xs:	274.42		
Ys:	13.32		
P:	3.33		
K:	137.40		
Tangent Direction:	320°15' 13"		
Radial Direction:	50°15' 13"		
Chord Direction:	317°28' 25"		
Radial Direction:	41°54' 45"		
Tangent Direction:	311°54' 45"		
Element: Circular			
SC (17)	3872+88.16	199550.10	1677984.07
PI ( )	3875+39.99	199718.33	1677796.66
CC (18)		198847.24	1677353.15
PT (19)	3877+80.15	199770.91	1677550.38
Radius:	944.50		
Delta:	29°51' 32" Left		
Degree of Curvature(Chord):	6°04' 09"		
Length:	492.21		
Length(Chorded):	491.98		
Tangent:	251.83		
Chord:	486.66		
Middle Ordinate:	31.88		
External:	33.00		
Tangent Direction:	311°54' 45"		
Radial Direction:	41°54' 45"		
Chord Direction:	296°58' 59"		
Radial Direction:	12°03' 13"		
Tangent Direction:	282°03' 13"		

NOT FOR CONSTRUCTION

SCALE: 1" = 100'

50 0 100 200 300

REV	BY	DATE	DESCRIPTION
P1	DJL	8/16/05	PRELIMINARY ENGINEERING PHASE REPORT

Hatch Mott MacDonald

NORFOLK SOUTHERN

OWNING COMPANY
POCAHONTAS
OPERATING DIVISION
OFFICE OF THE CHIEF ENGINEER - DESIGN AND CONSTRUCTION - ATLANTA, GA.

LOCATION: GLEN ALUM TUNNEL, GLEN ALUM, WV

TITLE: CURVE DATA

DGN | PID No. | VAN 16317 & 16318 | MILE POST N-439.47
DWN | FILE No. | DRAWING NUMBER
CHK | DATE APRIL 22, 2005

FILE NAME = P:\NSR\29399\CAD\survey info\439.47 Glen Alum\439.47 Glen Alum curve data.dgn
DATE/TIME = 10/12/2005 01:46:48 PM

Location	Changes Made	Plan No.	Additions A.P.E.	Additions Comp. Report No.	Additions F	Additions Year	Retirements A.P.E.	Retirements Comp. Report No.	Retirements F	Retirements Year
	Extend Tr. "A" - New P.S. 3850+88		PA2109	602	E	1921				
	Extend Culverts		PA6799	78	I	1927				
N.4399	Const. Tr. "A" - 3838+81		PA7452	324	I	1928				
	Const. Tr. C & Ext. Culverts		PA7872	479	I	1930				
3811+03	Const. Slide Detector Fence		VP-2450	158	I	1932				
Roger Pinion	Const. Signal Tower in B.O.G. Yard		RA8874			1937				
3855+00	Install Signal Tower - Pocahontas Yard		VA8873		E	1937				
3811+03 to 3854+40	Install Tr. "B" - Pocahontas Yard		VP-8075			1938	VP-8075			1939
3811+03 Rev. 1941	Remove New P.S. 3850+88 - Extend Tr. "A"						VP-8448			1938
	Install Cap Slide Fence in Main Tunnel		PA11870			1944				
3850+88	Install Cross Slide Fence in Main Tunnel	PA11780				1944	VP-11804			1944
3855+00 to 3854+40	Remove Tracks & Signal Tower - Main Tunnel						PA17856			1946
3811+03 to 3854+40	CENTRAL TRAFFIC CONTROL		PE-16911			1950	PE-16911			1950
N.S. Bridge 4.8	Rep. Lower Co. Rd. (S.B.&W.R.) 1948'	CE-58781					PE-35160			1974

SCHEDULE OF PROPERTY

No.	Grantor	Grantee	Instrument	Date	Record	Cust. No.	Remarks
1	Julius C Williams	NAW RR Co.	Condemned	Apr 23 1891		§211	C.D.R. 63 p 24
2	Briar Mountain Coal & Coke Co. Glen Alum Coal Company	NAW Ry Co.	Deed	Oct 18, 1909	DB 24 71 Dec 6 1909	§211-B	36 494
3	do	"	"	Oct 15 1909	DB 24 71 Dec 6 1909	§211-B	36 494
4	do	"	"	Oct 15 1909	DB 24 71 Dec 6 1909	§211-B	" "
5	do	"	"	Oct 15 1909	DB 24 71 Dec 6 1909	§211-B	" "
6	do	"	"	Oct 15 1909	DB 24 71 Dec 6 1909	§211-B	" "
7	Briar Mtn. Coal & Coke Co.	Do.	Do.	June 4, 1929	DB 64 204 June 25, 1929		78 515

This map was not prepared or intended for use as a real estate title map. The railway company does not represent or suggest that the property lines and right-of-way lines shown on the map are accurate or that any other information on the map is correct. The company does not represent that it has checked this map for accuracy.

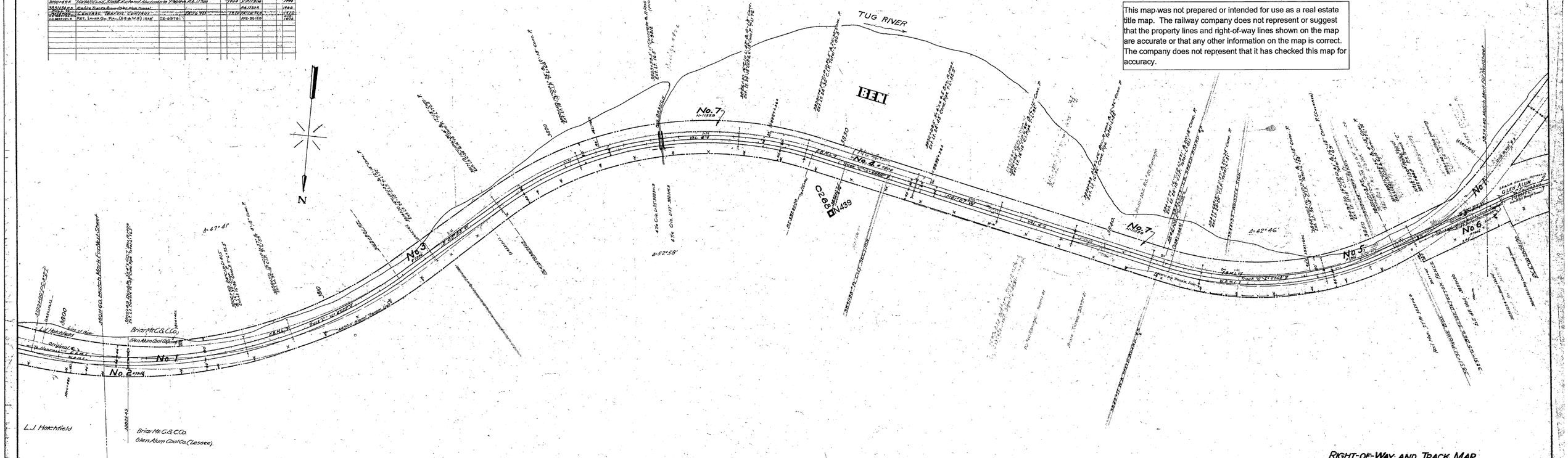

RIGHT-OF-WAY AND TRACK MAP.

NORFOLK AND WESTERN RY.

POCAHONTAS DISTRICT.

STATION 3801+60 TO STATION 3854+40

SCALE: 1IN=100 FT.

Office of Valuation Engineer.
Roanoke Va. June 30, 1916.

Sheet No. 62 of 204 sheets of Poca. District
from survey station 3801 + 60 to survey station 3854 + 40

Engineer.

VALUATION ENGINEER

V-13 WV 62

16317

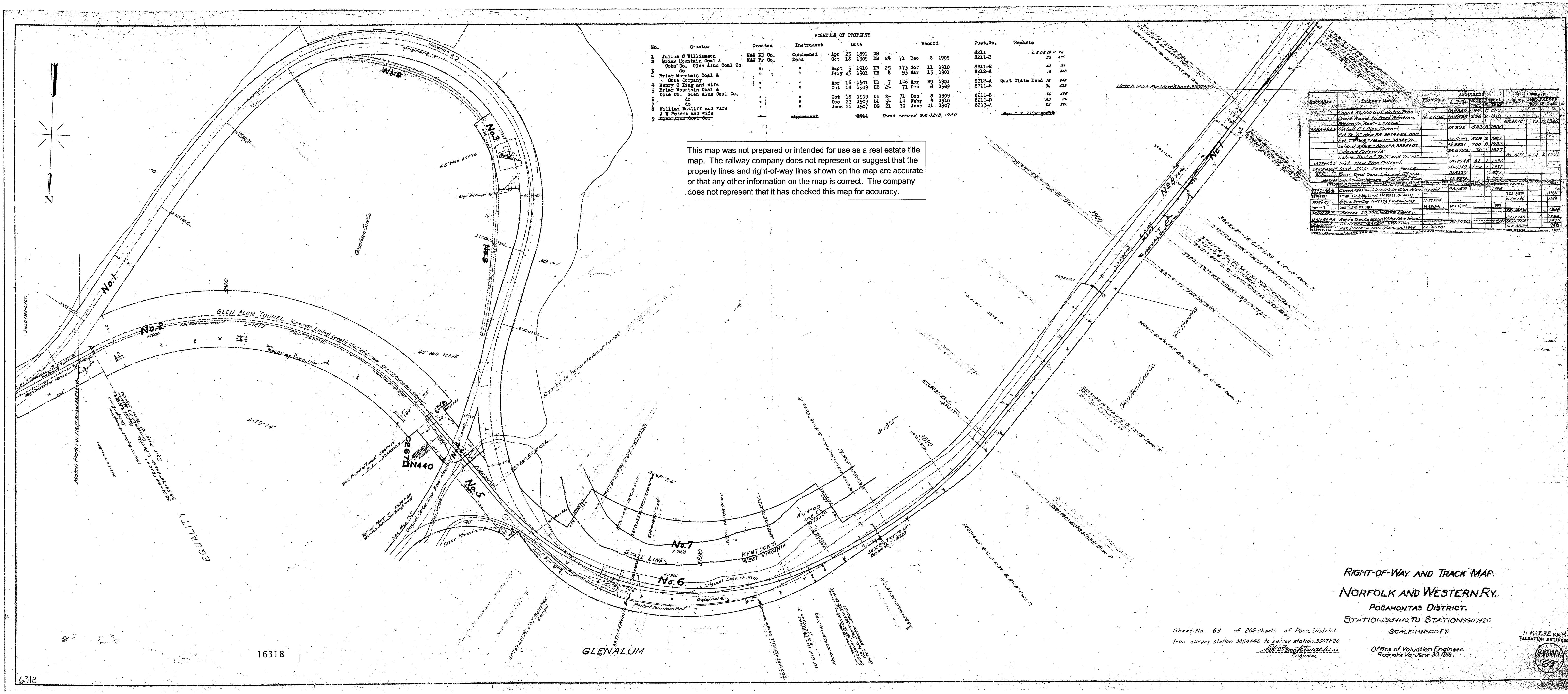

SCHEDULE OF PROPERTY

No.	Grantor	Grantee	Instrument	Date	Record	Cust.No.	Remarks
1	Julius C Williamson	N&W RR Co.	Condemned	Apr 23 1891	DB	8211	C.E.DB 19 P 26
2	Briar Mountain Coal & Coke Co. Glen Alum Coal Co	N&W Ry Co.	Deed	Oct 18 1909	DB 24 71 Dec 8 1909	8211-B	36 425
3	do	"	"	Sept 5 1910	DB 25 173 Nov 11 1910	8211-E	42 32
4	Briar Mountain Coal & Coke Company	"	"	Feby 23 1901	DB 8 93 Mar 13 1901	8212-A	13 400
4	Henry C King and wife	"	"	Apr 16 1901	DB 7 146 Apr 29 1901	8212-A	Quit Claim Deed 13 448
5	Briar Mountain Coal & Coke Co. Glen Alum Coal Co.	"	"	Oct 18 1909	DB 24 71 Dec 8 1909	8211-B	36 425
6	do	"	"	Oct 18 1909	DB 24 71 Dec 8 1909	8211-B	36 425
7	do	"	"	Dec 23 1909	DB 54 14 Feby 4 1910	8211-D	39 26
8	William Ratliff and wife J W Peters and wife	"	"	June 11 1907	DB 21 39 June 11 1907	8213-A	28 222
9	~~Glen Alum Coal Co.~~	~~"~~	~~Agreement~~	~~1911~~	Track retired GM 3218, 1920		~~Sec. C E File 50614~~

This map was not prepared or intended for use as a real estate title map. The railway company does not represent or suggest that the property lines and right-of-way lines shown on the map are accurate or that any other information on the map is correct. The company does not represent that it has checked this map for accuracy.

Location	Changes Made	Plan No.	Additions A.F.E.	Comp. Report No.	F	Year	Retirements A.F.E.	Comp. Report No.	F	Year
	Const. 50,000 Gal. Water Tank		PA 4350	94	1	1919				
	Const. Road to Pass. Station	N-5894	PA 4585	236	2	1919				
	Retire Tk. "Rea" - L = 1684'						GM 3218	19	1	1920
3885+96.5	Install C.I. Pipe Culvert		VP 395	523	2	1920				
	Ext. Tk. "A" New P.S. 3874+26 and Ext. ~~EB-WB~~ - New P.S. 3892+70		PA 5109	509	2	1921				
	Extend ~~A-WB~~ - New P.S. 3895+07		PA 5531	700	2	1923				
	Extend Culverts		PA 6799	72	1	1927				
	Retire Part of Tk. "A" and Tk. "A1"						PA-7672	679	2	1930
3877+07.5	Inst. New Pipe Culvert		VP-4948	82	1	1930				
3855+88±	Inst. Slide Detector Fence		VP-6340	158	1	1932				
Iaeger to Williamson	Const. Signal Trans. Line and Sig. Ckts.		PA 8275			1937				
3869+88	Install Telltale Warning (Final Record Notes filed "Telltales Y-1847")		V.P. 8379		2	1937				
3883+28	P.S. (in Briar Mtn. Branch) - Retire 537' from East End of Sidg. ... Trackage removed about Yr. 1927 ...						VR 11042			1943
3854+52.2 3869+98.9	Const. 1390' Concrete Ditch in Glen Alum Tunnel		P.A. 11570			1944				
3877+17±	Retire Sta. Bldg. (N-4441) & Toilet (N-4402)						V.P.A. 15890			1958
3878+27	Retire Dwelling N-4399A & Outbuilding	N-27526					V.P.A. 15746			1958
3877+18	Const. Shelter Shed	M-2745-A	V.P.A. 15889			1959				
3872+18	Retire 50,000 Water Tank						PA. 16830			1964
3851+54 P.S.	Retire Tracks Around Glen Alum Tunnel						PA 17325			1966
Bull to Matewan	Central Traffic Control		PA 16923			1970	PA 16928			1970
V.S. 3853+84.0 To V.S. 3869+46.5	Ret. Inner Gd. Rail (E.B. & W.B.) 1648'	CE-65781					AFE-35129			Aug. 1974
3883+22	Retire Trk. A	CE 42873					AFE 38613			1984

RIGHT-OF-WAY AND TRACK MAP.
NORFOLK AND WESTERN RY.
POCAHONTAS DISTRICT.
STATION 3854+40 TO STATION 3907+20
SCALE: 1 IN = 100 FT.

Sheet No. 63 of 204 sheets of Poca. District
from survey station 3854+40 to survey station 3907+20
[signature] Engineer.

Office of Valuation Engineer.
Roanoke Va. June 30, 1916.

11 MAR 92 KRB
VALUATION ENGINEER
V-13 W.V. 63