Heartland Corridor, Walton Virginia to Columbus Ohio

Preliminary Engineering Phase Report

Hemphill No. 2
Tunnel –
MP N400.42
Hemphill, WV

October 14, 2005, Rev. 2

Hatch Mott MacDonald

Hatch Mott MacDonald

Preliminary Engineering Phase Report

October 14, 2005

Norfolk Southern Railway
Heartland Corridor, Walton VA to Columbus OH

Hemphill No. 2 Tunnel – MP N400.42

Statistics: Pocahontas Division
Double-width Tunnel for Main #1 and Main #2
Length = 1,142'
Concrete lined
Tangent track (per Track Chart)
Superelevation = 0.0" (per Track Chart)

1. EXISTING CONDITIONS 2

2. CLEARANCE IMPROVEMENT ALTERNATIVES 5

3. PREFERRED ALTERNATIVE 6

4. USGS TOPOGRAPHIC MAP 8

5. AERIAL PHOTO 9

6. TRACK CHART 10

7. PHOTOS 11

8. ESTIMATE 14

9. DRAWINGS 16

Tunnel Clearance Cross Sections

Plan and Profile

Valuation Map

1. EXISTING CONDITIONS

1.1 Background

Valuation Map V-13WV/28 (16284) for the Hemphill No.2 Tunnel is dated June 30, 1916. Parcels for the tunnel were acquired in 1903. It is therefore suspected that the tunnel was constructed in 1903 or shortly afterwards.

Drawing Y-1939 dated Jan. 29, 1901 shows a typical section and portal elevation view. This drawing is for the Cooper Tunnel but there is a note that the drawing is used for the two Hemphill Tunnels and that all dimensions are retained but Portland cement concrete is substituted for brick and stone at the Hemphill Tunnels. Drawing Y-1939 shows cord wood packing, dry stone packing, and 10”x12” timbers spaced 4’ to 5’ apart above the brick; it is not clear if this was utilized at the Hemphill tunnels.

Drawing No. Y-1939-B (5 sheets) dated November 25, 1985 documents repairs done to the portals and the liner. The repairs include cast in place concrete, shotcrete, and pressure injected epoxy adhesive.

Additional information on this tunnel was obtained from various sources such as topographic maps, aerial photos, inspection reports, track charts, and field investigations that were performed on March 21, June 13, and July 18, 2005.

1.2 General Area

The tunnel is located in a lightly populated area in the Town of Hemphill near the City of Welch, McDowell County, West Virginia. Nearby land use includes residential areas near the east and west portals and a sewer treatment plant near the west portal. Staging areas are located off Tug River Road near the east portal and near the sewer treatment plant near the west portal. The tunnel may be accessed from Tug River Road. There are rail bridges in close proximity of the east and west portals.

1.3 Structural Conditions

The tunnel is 1142’ long with a concrete lining and a width of approximately 27.5’. It is a double-width tunnel for two tracks. A signals and communications cable is mounted on the south wall. There are drainage ditches along each wall and in between the tracks. The concrete liner is in generally good condition and typically dry. At the west end of the tunnel a 1” thick layer of shotcrete has been placed as a repair.

Liner cores were taken on July 18, 2005. Cores were drilled into the liner at locations 250’ and 900’ into the tunnel from the east portal. The cores were taken at the 7, 10 and 12 o’clock positions at each location. The liner probe investigation is summarized in the table below:

Summary of Hemphill No. 2 Tunnel Liner Core Investigation			
Distance from East Portal	**Position**	**Liner Thickness**	**Notes**
250’	7 o’clock	37”	5” of sandstone immediately behind liner. No void.
250’	10 o’clock	26”	Void behind liner.
250’	12 o’clock	27”	Void behind liner.
900’	7 o’clock	36”	Sound concrete with sandstone immediately behind liner. No void.
900’	10 o’clock	41”	Rebar at approx. 6” in. Sandstone immediately behind liner. No void.
900’	12 o’clock	19”	Void behind liner, then sandstone.

One sample of concrete from the liner core investigation was saved and tested. A sample from 250’ in from the east portal, taken from about 6” into the core had a compressive strength of 4,265 psi.

The bridge outside of the east portal of the tunnel (between Hemphill No. 1 Tunnel and Hemphill No. 2 Tunnel) was investigated on June 13, 2005. It is a 4-span timber deck girder bridge. The girders are built-up steel plate girders with the south pair of girders carrying Main #1 and the north pair carrying Main #2. The girders bear directly on the bridge seats and bents. The bridge spans over a road with only 7’-6” clearance. A similar bridge with similar bearings is located outside the west portal of the tunnel. The structure types and site geometry, coupled with the proximity of rock below the rail make track lowering a difficult and expensive option.

A small portion of the tunnel invert material was excavated to expose the base of the tunnel liner footing. The footing thickness was found to be 11”. The vertical distance from the top of rail to the base of the footing was measured at 24.5”.

1.4 Track

The track is continuous welded rail of conventional design with wooden crossties at approximately 19” on center and a stone ballast section. The ballast is generally clean with no pumping of fines observed. The rail is typically 141 AB on 15” tie plates and fastened with rail spikes. The water in the tunnel was tested and its pH reading was 7.95. This is a fairly neutral reading and indicates that the water is not unusually corrosive.

1.5 Geotechnical

The tunnels in the east-central part of the Pocahontas Division (including Hemphill No. 2) are located in the Appalachian Plateaus Physiographic Province, a region characterized by deeply incised plateaus underlain by flat-lying sedimentary rock. The tunnel itself is lined and no rock was exposed. The description of the site geology at the tunnel is based on our observations of the rockmass at the portals and adjacent cuts and the 1968 *West Virginia Geologic Map* prepared by the West Virginia Geologic and Economic Survey.

The tunnels was excavated through the medium- to thick-bedded fine-to medium grained sandstone of the New River Formation. The sandstone is locally interbedded with thin-bedded sandstone, siltstone, shale, and coal. Bedding is subhorizontal and gently rolls back and forth towards the northwest and southeast. Beds of thin-bedded sandstone and shale up to five feet thick were infrequently noted within the sandstone. At the west portal of the Hemphill No. 2 Tunnel, the thin bedded sandstone and shale were undercut and were observed to slowly spall over time. Joints in the rock cuts are typically steeply dipping and widely spaced. Most joints are less than 15 feet in length and are not through-going across the exposure face.

The rock quality designation, Q, at the portals was determined to be 17. A Q rating between 10 and 40 is considered "Good" with 10 bordering on "Fair" and 40 bordering on "Very Good." A sample of rock was taken from the portal and tested.

The geoprobes indicate that the top of rock is located between 1.8' to 4.2' (averaging about 3.4') below the top of ballast throughout the tunnel for Main #1 and between 2.2' to 4.2' (averaging about 3.12') below the top of ballast throughout the tunnel for Main #2. Top of ballast is typically about 0.8' below top of low rail.

1.6 Clearances

The laser car measurements indicate that the existing tunnel has inadequate horizontal clearance for the "High-Wide Load" portion of the composite clearance envelope on both walls for approximately 25% of the tunnel, particularly near the west portal. The "High-Wide Load" encroaches on average 1" on each wall and varies up to 3". For the "Double Stack" portion of the composite envelope, horizontal clearance is adequate. For vertical clearance, the "Double Stack" portion of the composite design envelope encroaches on both sides of the tunnel crown by an average of about 13"and varies up to 17". The "High-Wide Load" encroaches on the either side of the crown by an average of about 6", varying up to 11", at points lower on the crown than the "Double Stack" template. Cross sections of the tunnel clearance encroachments are shown in the drawings at the end of this report. The maximum vertical encroachments are summarized in the table below:

	Crown Encroachment (radial inches)	
Distance (ft) from East Portal	**Left Side**	**Right Side**
0	12	14

	Crown Encroachment (radial inches)	
Distance (ft) from East Portal	Left Side	Right Side
101	11	14
201	12	12
301	10	13
401	11	14
501	11	15
601	12	15
702	13	15
801	14	13
901	15	12
1002	16	12
1101	17	14
1142	17	12

2. CLEARANCE IMPROVEMENT ALTERNATIVES

Given the magnitude of the vertical clearance deficiency, there are several general alternatives that can be used to obtain the clearance; replacing the lining, notching the lining or using steel ties to lower the track. Combinations of the general methods may be required to obtain a design that is cost effective and that can be constructed within reasonable track outages. Track lowering or undercutting does not appear feasible due to the proximity of the top of rock to the surface.

2.1 Liner Replacement

With this method, to obtain the desired clearance the concrete liner at the crown must be demolished, the native rock excavated to the clearance limits plus the new liner thickness, and a new concrete liner installed. However, the magnitude of encroachment does not appear to be enough to warrant liner replacement, except for last 150' from the west portal where the encroachment exceeds 16".

2.2 Notching the Crown

Notching in the upper quadrants of the tunnel would not cut entirely through the liner and would be a more economical alternative to complete liner replacement. Considering that the average vertical encroachment for the "Double Stack" portion of the envelope is currently 13", rock dowels and a deep notching scheme will be necessary. This method is a feasible alternative for encroachments up to 16" and that amount is exceeded in this tunnel only near the west portal.

A form of notching by means of hydro-demolition would be a viable alternative for achieving the necessary horizontal clearance for the "High-Wide" portion clearance envelope. Hydro-demolition provides the ability to shave off several inches of concrete from the interfering wall.

Preliminary calculations indicate that 6” could be shaven off the wall with little adverse effects to the wall stability. This method is necessary for 25% right side of the tunnel and 15% of the left side of the tunnel.

2.3 Steel Ties

Substitution of steel ties for the standard wood ties would permit the rails to be lowered about 6 inches. Transition sections would be constructed at the tunnel approaches for the vertical curves and for a gradual transition in track stiffness. A proper drainage system is required to minimize corrosion of the ties.

Steel ties would not be sufficient to fix the entire clearance deficiencies, but in some cases could be used in conjunction with notching to provide a more economical solution. In this case, it appears that steel ties could reduce the maximum encroachment to under 16”, which would allow the deep notching method to be used near the west portal instead of liner replacement. Due to the close proximity of the rail bridge outside the west portal, steel ties would require expensive and impractical bridge modifications in order to lower the bridge. Also, lateral shifting of the track is a concern when using steel ties. Steel ties do not provide enough of an advantage to warrant their expense as well as the bridge modifications. Therefore, steel ties will no longer be considered as a viable alternatives.

3. PREFERRED ALTERNATIVE

Given the magnitude of the vertical encroachment, installing rock dowels and using the deep notching method is the most feasible and economical solution to provide adequate vertical clearance for the first 1000’ of the tunnel. Replacement of the liner crown may be necessary for the last 150’ of the tunnel. Minor wall modifications (approx. 1” deep) will be required to gain adequate horizontal clearance for the High-Wide portion of the clearance envelope. These modifications will be necessary for 25% of the tunnel length for the right wall and 15% of the tunnel length of the left wall. Detailed analysis into the necessity of, and method for, wall modifications will be done in final design. Drainage improvements are also recommended.

3.1 Preliminary Design

The preferred scheme for the preliminary design of tunnel improvements is as stated above. However, some modifications to that scheme will be implemented in the preliminary design. Considering the concrete repairs that took place in the mid-1980s, it will be assumed for planning purposes that 25% of the tunnel that is intended for notching will not be suitable for that method and will have to be crown replacement. Additional investigations in the final design phase will assess the ability of the liner to sustain a deep notch. Also, considering the voids encountered above the liner, the estimate will include an allowance for an additional quantity of grout for above the liner. Therefore, the preliminary design uses deep notching on both sides of the tunnel for 750’ of the tunnel. Replacement of the tunnel crown will be done for 400’ of the tunnel.

The existing track structure is planned to be flooded with ballast to the top of the rail to provide access into the tunnel for the contractor to work and to protect the track during the construction. The preliminary design also proposes to install a new drainage system and undercut the track to replace the ballast.

3.2 Schedule

The estimated schedule for completing improvements on this tunnel is twenty-four (24) weeks from mobilization to demobilization. The schedule assumes that one track is closed at a time, for ten hours, five days a week. The installation of rock dowels at a given location would precede the deep notching, but the two operations could occur within the tunnel at different locations at the same time. For liner removal, the schedule assumes 12' of crown removal each day, with concrete removal, rock removal, installation of rock dowels and installation of shotcrete all occurring on the same day for each 12' segment. Wall modifications would be completed after the tunnel crown has been replaced. Likewise, drainage improvement operations would also be undertaken at the same time.

3.3 Estimate

The total estimated cost for achieving clearance at this location is $4.5 million, or $3,949 per foot of tunnel. The work items include mobilization, surveying, rock dowels, deep notching, rock cut for drainage trench, tunnel drainage system, ballast cleaning, and demobilization. Allowances for grouting the invert void and for grouting above the liner were also included. The total cost is made up of tunnel, track, signal and site work items at $2.8 million, plus a 30% construction contingency, a 10% engineering allowance, and a 14% construction management allowance.

4. USGS TOPOGRAPHIC MAP

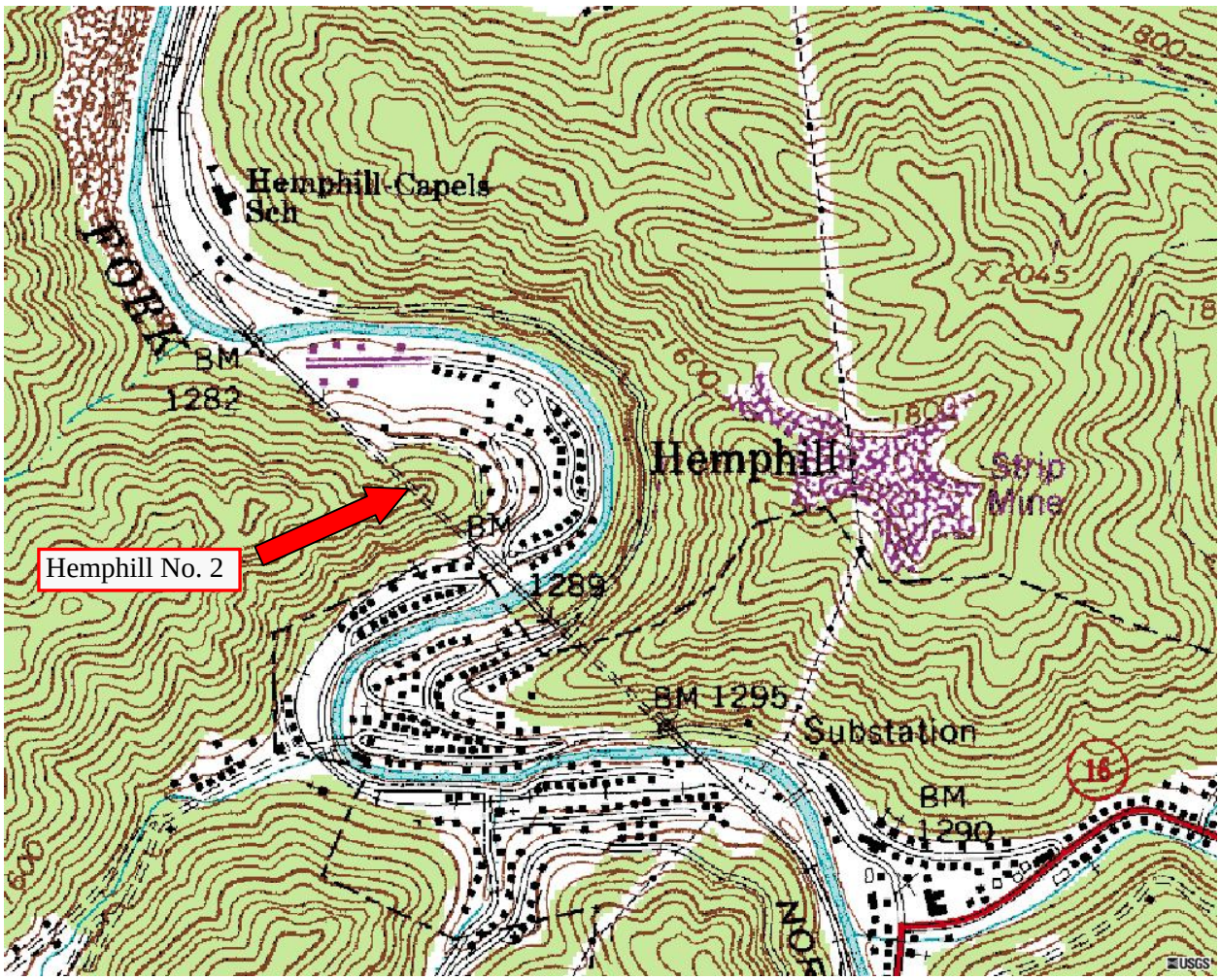

5. AERIAL PHOTO

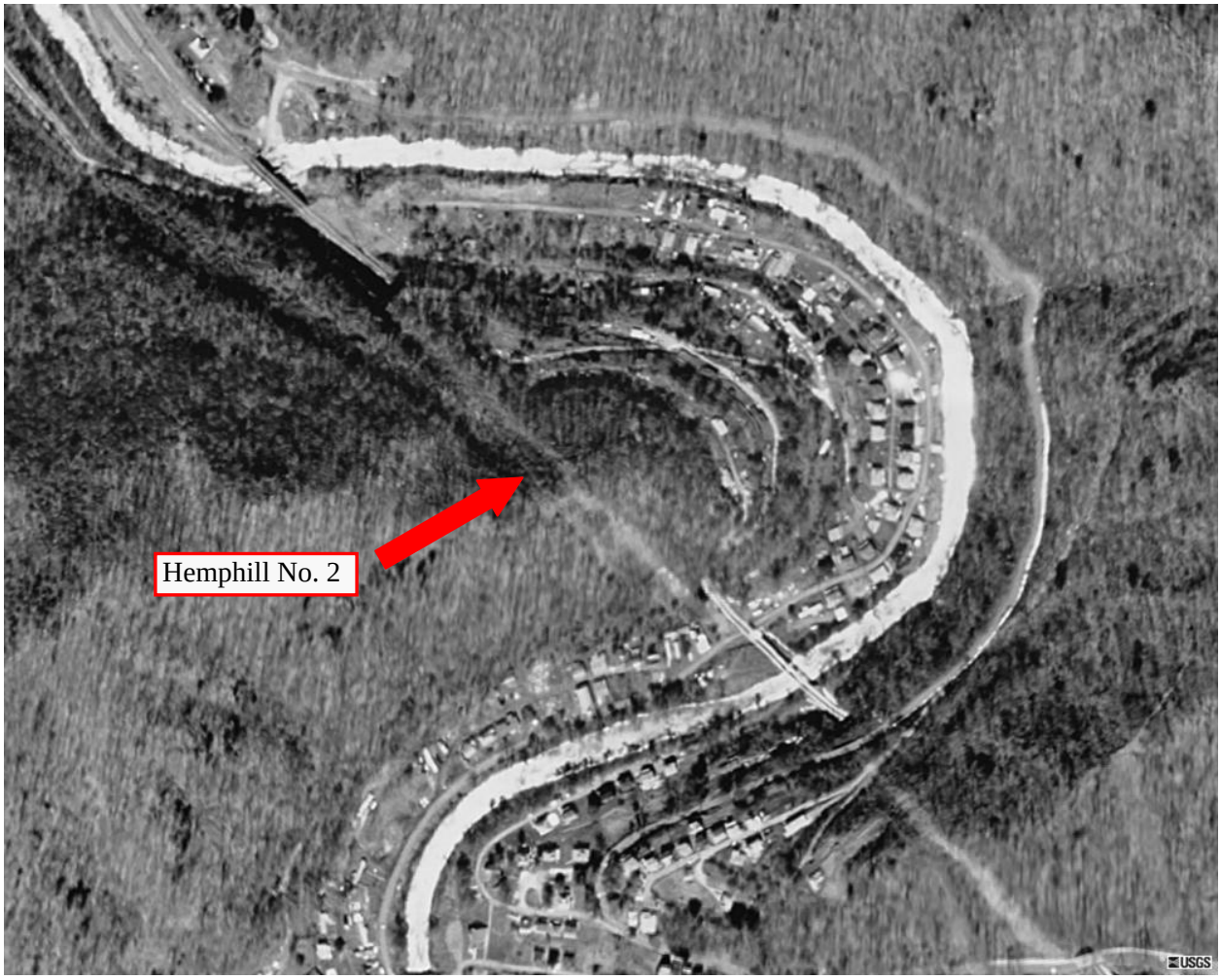

6. TRACK CHART

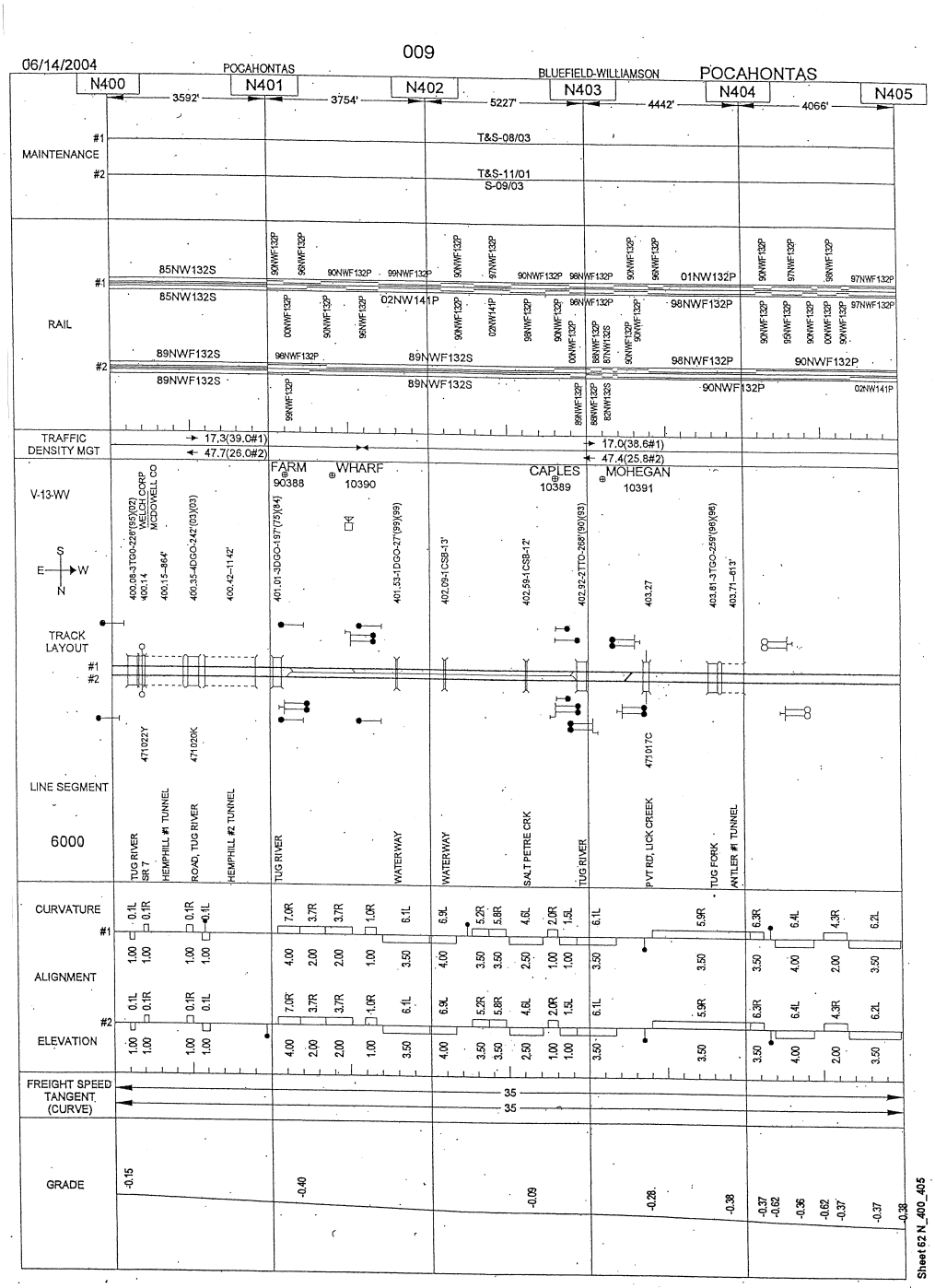

7. PHOTOS

Photo No. 1 – East Portal

Photo No. 2 – Looking from East Portal

Photo No. 3. – West Portal

Photo No. 4. – Looking from West Portal

Photo No. 5. – Shotcrete Failing

Photo No. 6. – Leak in Wall at Construction Joint

8. ESTIMATE

Hemphill No. 2

Tunnel Length	1142	ft
Tunnel Width	27.25	ft
# of Tracks	2	

	Contractor		Railroad	
Work Window	10	hrs	10	hrs
Setup & Demobilization Allowance	2	hrs	2	hrs
Production Time	8	hrs	8	hrs

Tunnel Work Items	UOM	Quantity	Unit Rate	Total
Mobilization	%	5%		$109,383.28
Surveying	DY	5	$1,300.00	$6,500.00
Deep Notching	LF	1500	$213.18	$319,771.56
Rock Dowels 14' with Chain Link Mesh - Crown	EA	667	$602.96	$401,975.47
Rock Dowels 16'	EA	750	$289.29	$216,969.60
Crown Removal	SF	18850	$16.16	$304,608.80
Wall Hydrodemolition	SF	6966	$4.54	$31,659.20
Rock Removal - Crown	CY	698	$426.72	$297,908.80
Crown Installation	SF	18850	$24.41	$460,166.99
Rock Cut Drainage Trench	LF	1242	$88.07	$109,387.20
Tunnel Drainage	LF	1242	$17.96	$22,302.00
Demobilization	DY	5	$3,283.20	$16,416.00
Total Tunnel Work Items	**LF**	**1142**	**$2,011.43**	**$2,297,048.90**

Trackwork Items	UOM	Quantity	Unit Rate	Total
Mobilization	DY	1	$3,110.32	$3,110.32
Surveying	DY	2	$1,300.00	$2,600.00
Track Preparation/Restoration	DY	3	$3,431.32	$10,293.96
Undercutting	PF	1142	$22.79	$26,029.72
Saw Cuts	EA	6	$6,092.96	$36,557.76
Field Welds	EA	6	$2,698.37	$16,190.25
Surfacing & Lining	PF	6852	$2.26	$15,456.10
Ballasting Track	TN	1200	$39.78	$47,731.32
Equalizing rail	DY	2	$6,701.14	$13,402.28
Demobilization	DY			
Total Trackwork Items				**$171,371.71**

Signal Items	UOM	Quantity	Unit Rate	Total
Mobilization	DY			
Relocate Cables / Track Leads	LF	1142	$12.41	$14,177.78
Demobilization	DY			
Total Signal Items				**$14,177.78**

Site Items	UOM	Quantity	Unit Rate	Total
Mobilization	DY	1	$2,483.60	$2,483.60
Erosion & Sedimentation Control	EA	1	$11,958.80	$11,958.80
Demobilization	DY			
Total Site Items				**$14,442.40**

Special Items	UOM	Quantity	Unit Rate	Total
Mobilization	DY			
Flagging	DY	117	$821.50	$96,115.50
Flood Track with Ballast for Protection	TN	2400	$37.90	$90,963.03
Remove Flooded Ballast	TN	2400	$10.20	$24,474.46
Invert/Crown Void Grouting	DY	20	$4,448.80	$88,976.00
Demobilization	DY			
Total Specialty Items				**$300,528.98**

Subtotal All Items		**$2,797,569.77**
Construction Contingency	**30%**	**$839,270.93**
Engineering Allowance	**10%**	**$363,684.07**
Construction Management Allowance	**14%**	**$509,157.70**
Total		**$4,509,682.47**

9. DRAWINGS

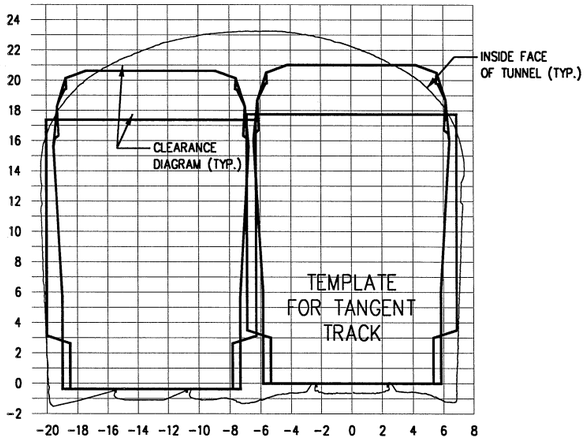

0+00

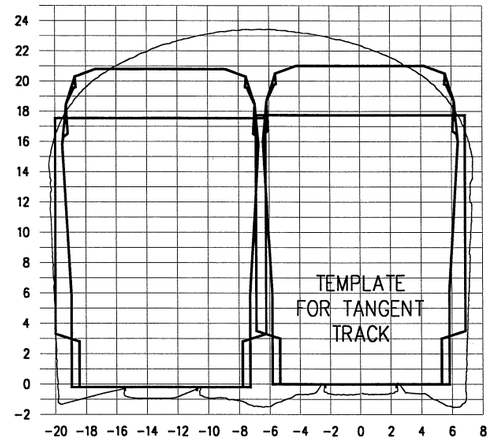

1+51

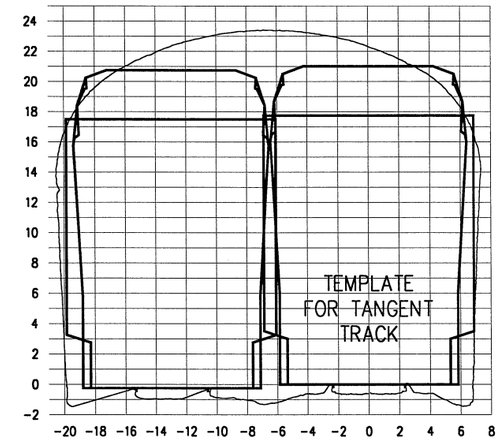

3+01

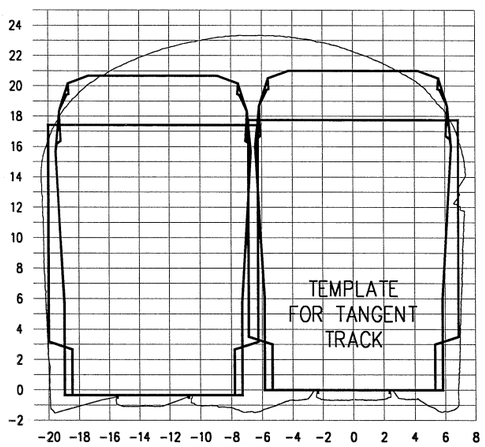

0+51

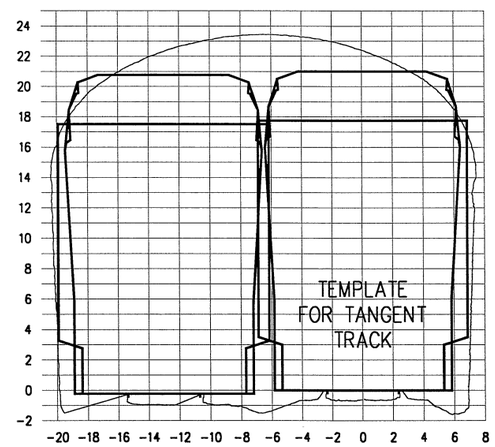

2+01

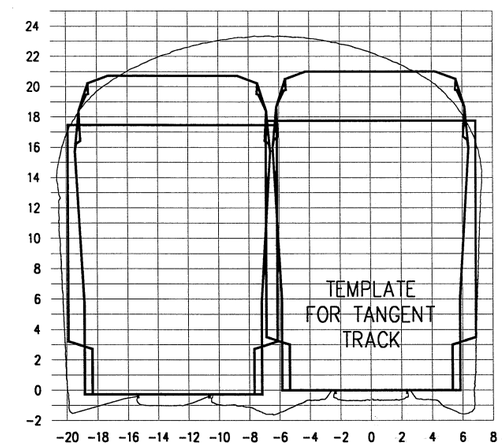

3+51

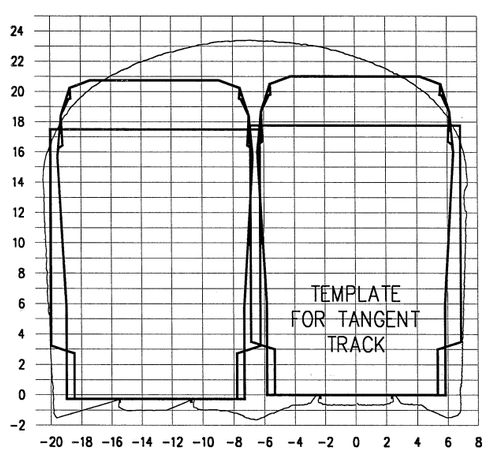

1+01

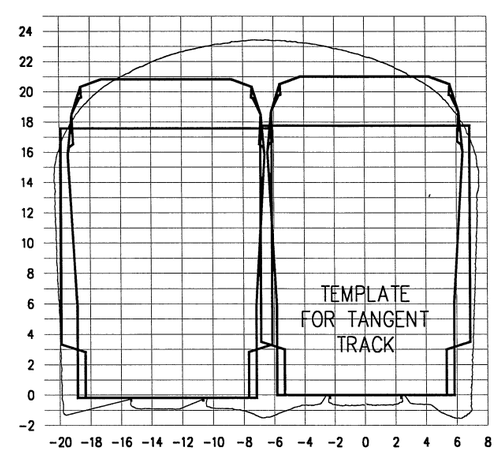

2+51

NOTES:

1. HORIZONTAL DATUM IS PARALLEL TO TRACK. WHERE TRACK IS SUPERELEVATED, DATUM IS NOT PARALLEL WITH GROUND.
2. CROSS SECTION GIVEN FOR STA. 0+00 IS A COMPOSITE FOR THE TUNNEL FROM STA. 0+00 THROUGH 0+50. ALL OF THE SECTIONS FOLLOW THIS CONVENTION.

NOT FOR CONSTRUCTION

SCALE: 1" = 100'

50 0 100 200 300

Hatch Mott MacDonald

NORFOLK SOUTHERN

OWNING COMPANY
POCAHONTAS
OPERATING DIVISION
OFFICE OF THE CHIEF ENGINEER - DESIGN AND CONSTRUCTION - ATLANTA, GA.

REV LTR	DATE	DESCRIPTION
PT	DJL 8/5/05	PRELIMINARY ENGINEERING PHASE REPORT

LOCATION: HEMPHILL NO. 2, HEMPHILL, WV

TITLE: TUNNEL CLEARANCE CROSS SECTIONS – 1 OF 3

DGN | PID No. | VRN | MILE POST 16278 N-394.24

DWN | FILE No. | DRAWING NUMBER

CHK | DATE APRIL 15, 2005

FILE NAME = $FILE$
DATE/TIME = $DATE$ $TIME$

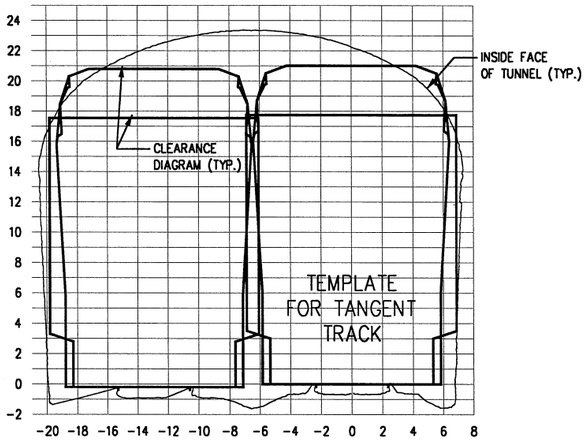

4+01

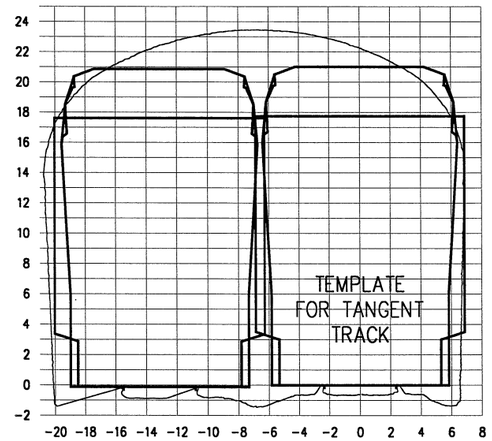

5+51

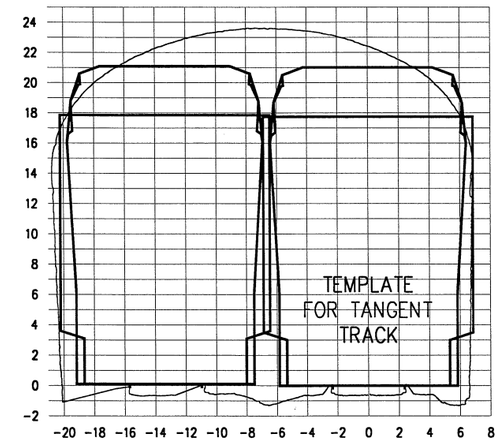

7+02

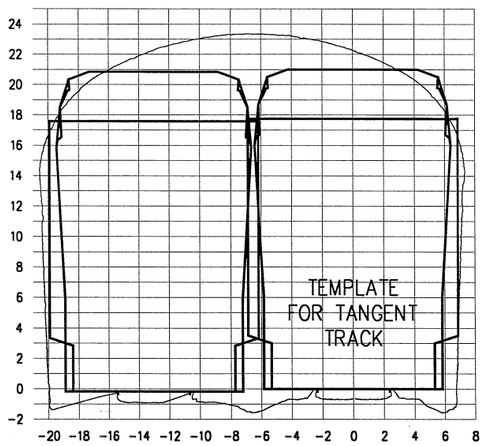

4+51

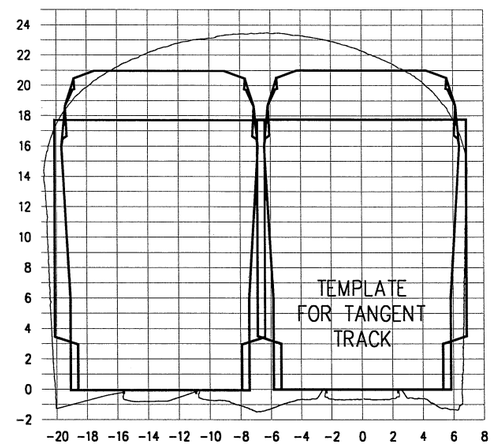

6+01

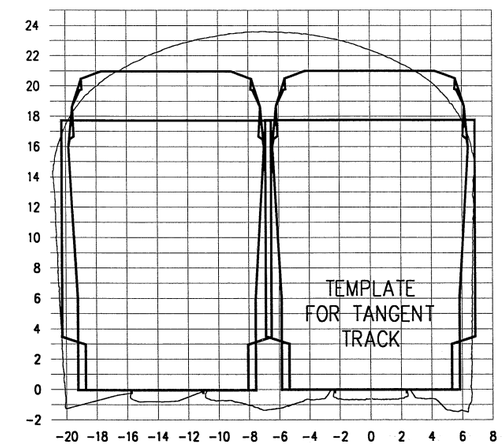

7+51

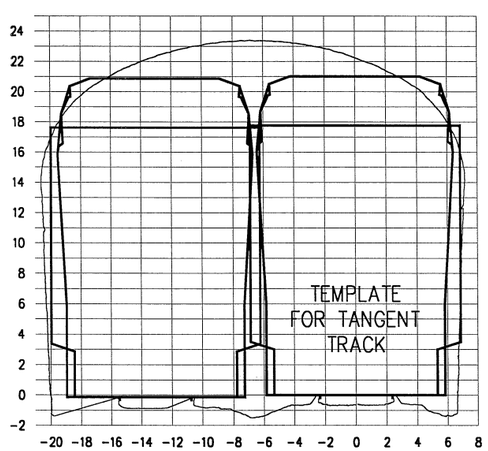

5+01

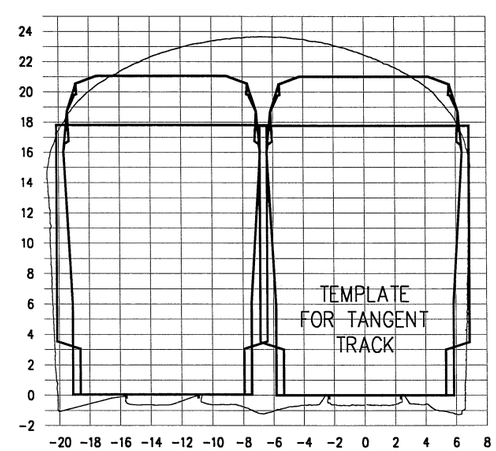

6+51

NOTES:

1. HORIZONTAL DATUM IS PARALLEL TO TRACK. WHERE TRACK IS SUPERELEVATED, DATUM IS NOT PARALLEL WITH GROUND.
2. CROSS SECTION GIVEN FOR STA. 0+00 IS A COMPOSITE FOR THE TUNNEL FROM STA. 0+00 THROUGH 0+50. ALL OF THE SECTIONS FOLLOW THIS CONVENTION.

NOT FOR CONSTRUCTION

SCALE: 1" = 100'

50 0 100 200 300

Hatch Mott MacDonald

NORFOLK SOUTHERN

OWNING COMPANY
POCAHONTAS
OPERATING DIVISION
OFFICE OF THE CHIEF ENGINEER - DESIGN AND CONSTRUCTION - ATLANTA, GA

REV	BY	DATE	DESCRIPTION
P1	DJL	8/5/05	PRELIMINARY ENGINEERING PHASE REPORT

LOCATION: HEMPHILL NO. 2, HEMPHILL, WV

TITLE: TUNNEL CLEARANCE CROSS SECTIONS - 2 OF 3

DGN | PID No. | VRN | 16278 | MILE POST N-394.24

DWN | FILE No. | DRAWING NUMBER

CHK | DATE APRIL 15, 2005

FILE NAME = $FILE$
DATE/TIME = $DATE$ $TIME$

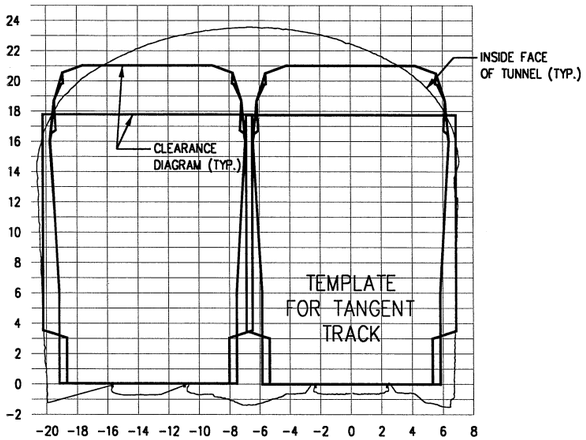

8+01

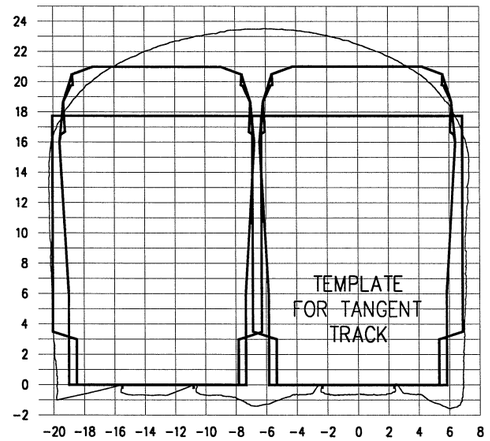

9+50

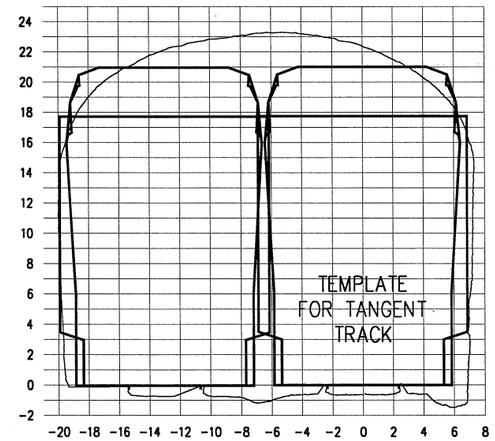

11+01

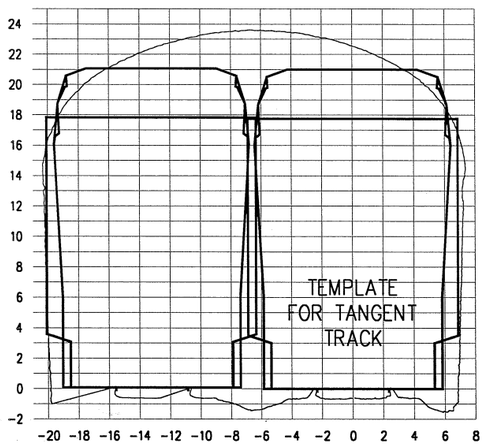

8+50

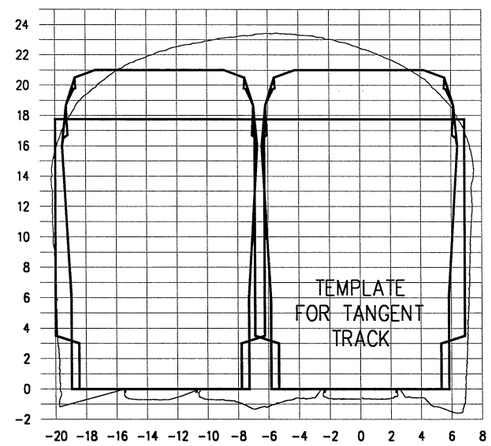

10+02

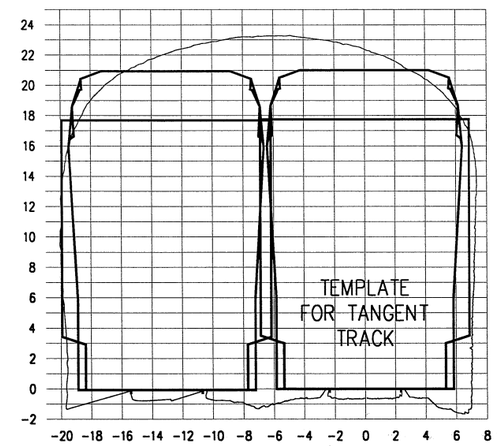

11+46

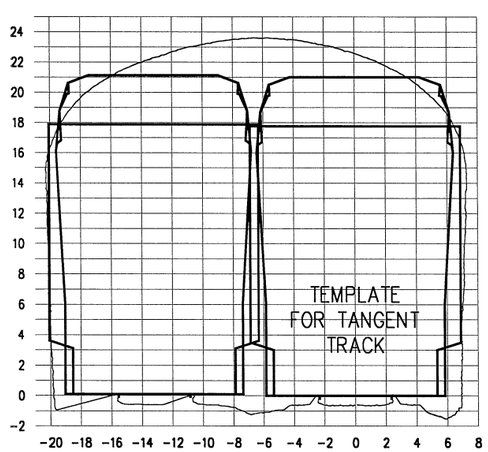

9+01

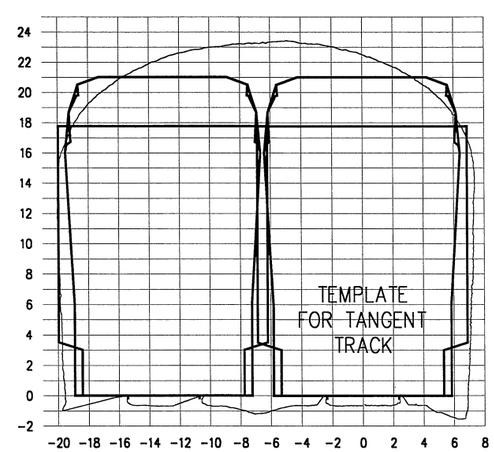

10+50

NOTES:

1. HORIZONTAL DATUM IS PARALLEL TO TRACK. WHERE TRACK IS SUPERELEVATED, DATUM IS NOT PARALLEL WITH GROUND.
2. CROSS SECTION GIVEN FOR STA. 0+00 IS A COMPOSITE FOR THE TUNNEL FROM STA. 0+00 THROUGH 0+50. ALL OF THE SECTIONS FOLLOW THIS CONVENTION.

NOT FOR CONSTRUCTION

SCALE: 1"=100'

50 0 100 200 300

Hatch Mott MacDonald

NORFOLK SOUTHERN

OWNING COMPANY
POCAHONTAS
OPERATING DIVISION
OFFICE OF THE CHIEF ENGINEER - DESIGN AND CONSTRUCTION - ATLANTA, GA.

REV	BY	DATE	DESCRIPTION
P1	DJL	8/5/05	PRELIMINARY ENGINEERING PHASE REPORT

LOCATION: HEMPHILL NO. 2, HEMPHILL, WV

TITLE: TUNNEL CLEARANCE CROSS SECTIONS - 3 OF 3

DGN	PID No.	VRN	16278	MILE POST N-394.24
DWN	FILE No.			DRAWING NUMBER
CHK	DATE APRIL 15, 2005			

FILE NAME = $FILE$
DATE/TIME = $DATE$ $TIME$

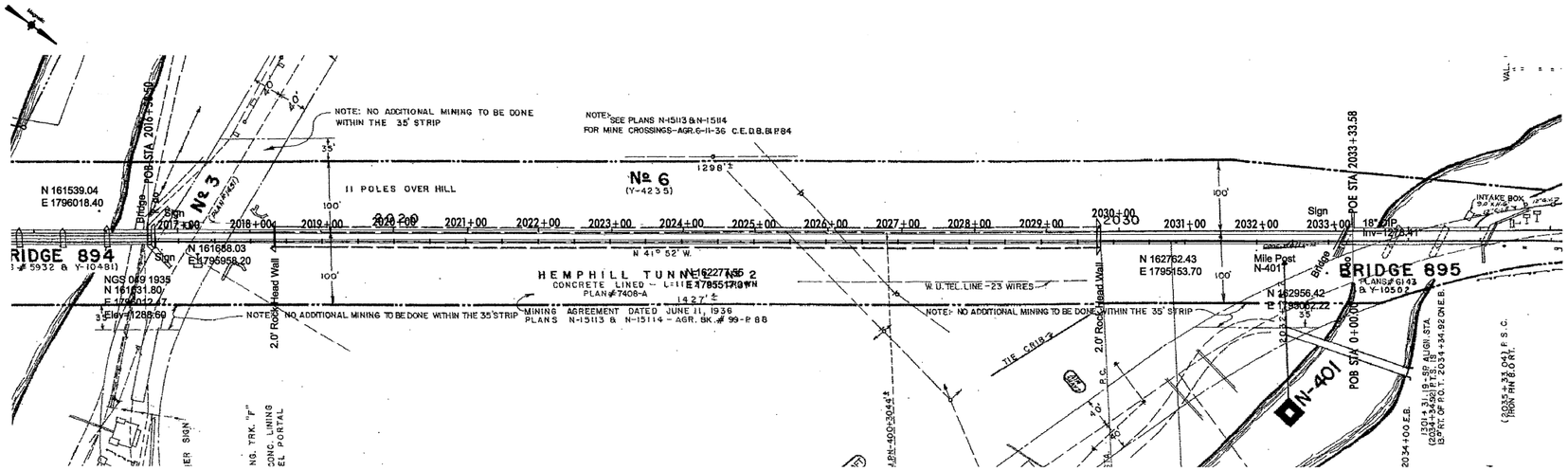

HEMPHILL NO. 2 PLAN

SCALE: 1"=100'

HEMPHILL NO. 2 CENTERLINE DATA

Horizontal Alignment Name: 1
Description:
Style:
Input Factor: 1.0000

	STATION	NORTHING	EASTING
Element: Linear			
POB (1)	2016+58.50	161618.71	1796010.63
POE (2)	2033+33.58	162959.23	1795006.20
Tangent Direction:	323°09'22"		
Tangent Length:	1675.08		

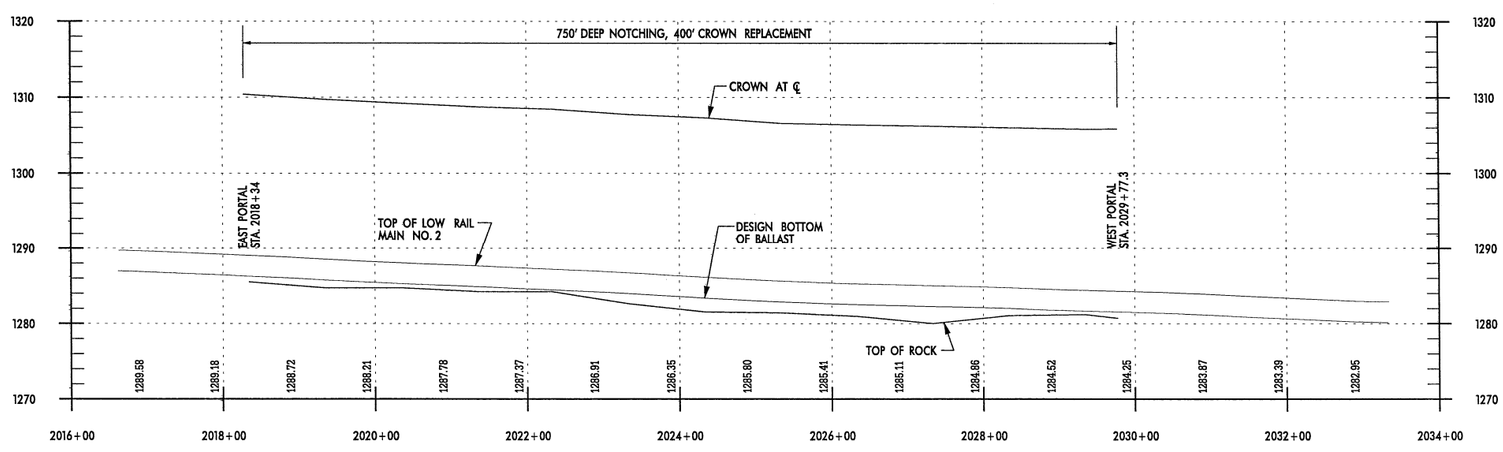

HEMPHILL NO. 2 PROFILE

SCALE: 1"=100' HORIZ.
1"=10' VERT.

NOT FOR CONSTRUCTION

SCALE: 1"=100'

50 0 100 200 300

REV	BY	DATE	DESCRIPTION
P2	DJL	10/14/05	PRELIMINARY ENGINEERING PHASE REPORT
P1	DJL	8/5/05	PRELIMINARY ENGINEERING PHASE REPORT

Hatch Mott MacDonald

NORFOLK SOUTHERN

OWNING COMPANY
POCAHONTAS
OPERATING DIVISION
OFFICE OF THE CHIEF ENGINEER - DESIGN AND CONSTRUCTION - ATLANTA, GA.

LOCATION: HEMPHILL NO. 2 TUNNEL, HEMPHILL, WV

TITLE: PLAN AND PROFILE

DGN	PID No.	VRN	16284	MILE POST	N-392.06
DWN	FILE No.			DRAWING NUMBER	
CHK	DATE	APRIL 15, 2005			

FILE NAME = P:\NSR\219399\CAD\survey Info\400.42 Hemphill No. 2\400.42 hemphill no 2.dgn
DATE/TIME = 10/12/2005 02:48:17 PM

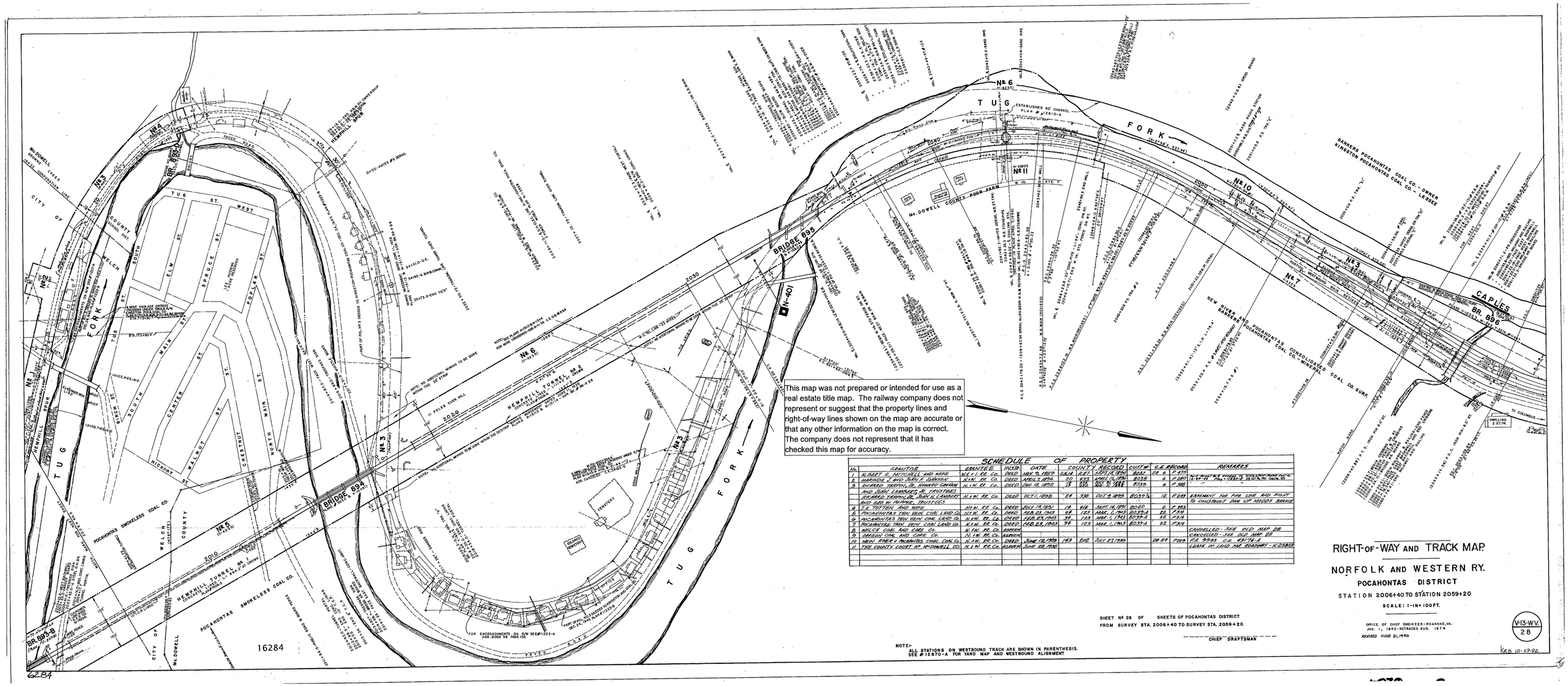

This map was not prepared or intended for use as a real estate title map. The railway company does not represent or suggest that the property lines and right-of-way lines shown on the map are accurate or that any other information on the map is correct. The company does not represent that it has checked this map for accuracy.

SCHEDULE OF PROPERTY

No.	GRANTOR	GRANTEE	INSTR.	DATE	COUNTY RECORD			CUST. No.	C.E. RECORD		REMARKS
1	ALBERT C. MITCHELL AND WIFE	N.&W. R.R. Co.	DEED	NOV. 15, 1909	D&A	1.87	SEPT. 28, 1910	8037	D8 A	P 275	
2	HARVEY T. AND ELLEN F. ROBINSON	N.&W. R.R. Co.	DEED	APRIL 7, 1904	80	493	APRIL 14, 1904	8038	E	P 280	
3	RICHARD TARPIN, JR. HOWARD GORDON AND ELLEN L. LAMBERT & TRUSTEES	N.&W. R.R. Co.	DEED	JAN. 15, 1892	18	326	NOV. 11, 1892	8039	A	P 288	
	RICHARD TARPIN, SR. ELLEN L. LAMBERT AND GEO. W. TAYLOR, TRUSTEES	N.&W. R.R. Co.	DEED	OCT. 1, 1898	88	338	OCT. 9, 1898	8039½	12	P 289	EASEMENT FOR PIPE LINE AND RIGHT TO CONSTRUCT DAM UP HOLDS BRANCH
4	T.E. TOTTEN AND WIFE	N.&W. R.R. Co.	DEED	JULY 15, 1901	16	416	SEPT. 14, 1901	8040	G	P 293	
5	POCAHONTAS THIN VEIN COAL LAND CO.	N.&W. R.R. Co.	DEED	FEB. 23, 1903	96	183	MAR. 1, 1903	8039-A	8E	P 314	
6	POCAHONTAS THIN VEIN COAL LAND CO.	N.&W. R.R. Co.	DEED	FEB. 23, 1903	96	183	MAR. 1, 1903	8039-A	8E	P 314	
7	POCAHONTAS THIN VEIN COAL LAND CO.	N.&W. R.R. Co.	DEED	FEB. 23, 1903	96	183	MAR. 1, 1903	8039-A	8E	P 314	
8	WELCH COAL AND COKE Co.	N.&W. R.R. Co.	AGREEM.								CANCELLED - SEE OLD MAP 28
9	OREGON COAL AND COKE Co.	N.&W. R.R. Co.	AGREEM.								CANCELLED - SEE OLD MAP 28
10	NEW RIVER & POCAHONTAS COAL COAL Co.	N.&W. R.R. Co.	DEED	JUNE 12, 1939	143	802	JULY 27, 1939		D8 B1	P 809	F/A 9993 C.E. 43174-A
11	THE COUNTY COURT OF McDOWELL CO.	N.&W. R.R. Co.	AGREEM.	JUNE 28, 1902							LEASE OF LAND FOR ROADWAY - 12 25859

SHEET No. 28 OF SHEETS OF POCAHONTAS DISTRICT
FROM SURVEY STA. 2006+40 TO SURVEY STA. 2059+20

CHIEF DRAFTSMAN

NOTE:-
ALL STATIONS ON WESTBOUND TRACK ARE SHOWN IN PARENTHESIS.
SEE #12870-A FOR YARD MAP AND WESTBOUND ALIGNMENT

RIGHT-OF-WAY AND TRACK MAP

NORFOLK AND WESTERN RY.

POCAHONTAS DISTRICT

STATION 2006+40 TO STATION 2059+20

SCALE: 1-IN=100FT.

OFFICE OF CHIEF ENGINEER-ROANOKE, VA.
JAN. 1, 1940-RETRACED AUG. 1974
REVISED JUNE 21, 1950

V-13-WV
28

KRD 10-29-92